A Textron Company

Owner's Guide

622021

ISSUED JULY 2011 **REVISED NOVEMBER 2011**

WELCOME

Thank you for purchasing this vehicle. Before driving the vehicle, we ask you to spend some time reading this Owner's Guide. This guide contains the information that will assist you in maintaining this highly reliable vehicle. Some illustrations may show items that are optional for your vehicle. This guide covers the operation of several vehicles; therefore, some illustrations may not represent your vehicle. Physical differences in controls will be illustrated.

Most of the service procedures in this guide can be accomplished using common, automotive hand tools. Contact your service representative on servicing the vehicle in accordance with the Periodic Service Schedule.

Repair or replacement parts are available through your E-Z-GO retailer or E-Z-GO Genuine Service Parts.

The following information is needed when contacting E-Z-GO concerning service or parts for your vehicle:

Vehicle Model _____

VIN Number _____

Read all of this manual to become thoroughly familiar with this vehicle. Pay particular attention to all Notices, Cautions, Warnings, and Dangers.

OWNER'S GUIDE
GASOLINE POWERED VEHICLE

TERRAIN 1500

STARTING MODEL YEAR 2012

Never modify the vehicle in any way that will alter the weight distribution of the vehicle, decrease its stability or increase the speed beyond the factory specifications. Such modifications can cause serious personal injury or death. E-Z-GO Division of Textron, Inc. prohibits and disclaims responsibility for any such modifications or any other alteration which would adversely affect the safety of the vehicle.

E-Z-GO Division of Textron, Inc. reserves the right to incorporate engineering and design changes to products in this manual, without obligation to include these changes on units sold previously.

The information contained in this manual may be revised periodically by E-Z-GO Division of Textron, Inc., and therefore is subject to change without notice.

E-Z-GO Division of Textron, Inc. DISCLAIMS LIABILITY FOR ERRORS IN THIS MANUAL, and SPECIFICALLY DISCLAIMS LIABILITY FOR INCIDENTAL AND CONSEQUENTIAL DAMAGES resulting from the use of the information and materials in this Manual.

These are the original instructions as defined by 2006/42/EC.

TO CONTACT US

E-Z-GO Division of Textron Inc.
1451 Marvin Griffin Road.
Augusta, Georgia, USA 30906-3852

North America:
Technical Assistance & Warranty PHONE: 1-800-774-3946 FAX: 1-800-448-8124
Service Parts PHONE: 1-888-GET-EZGO (1-888-438-3946) FAX: 1-800-752-6175
International:
PHONE: 001-706-798-4311 FAX: 001-706-771-4609

FOREWORD

Read all of this manual to become thoroughly familiar with this vehicle. Pay particular attention to all Notices, Cautions, Warnings, and Dangers.

This vehicle has been designed and manufactured in the United States of America (USA) as a 'World Vehicle'. The Standards and Specifications listed in the following text originate in the USA unless otherwise indicated.

The use of non Original Equipment Manufacturer (OEM) approved parts may void the warranty.

Overfilling battery may void the warranty.

Tampering with or adjusting the governor to permit vehicle to operate at above factory specifications will void the vehicle warranty.

When servicing engines, all adjustments and replacement components must be per original vehicle specifications in order to maintain the United States of America Federal and State emission certification applicable at the time of manufacture.

BATTERY PROLONGED STORAGE

All batteries will self discharge over time. The rate of self discharge varies depending on the ambient temperature and the age and condition of the batteries.

A fully charged battery will not freeze in winter temperatures unless the temperature falls below -75°F (-60°C).

TABLE OF CONTENTS

Read all of this manual to become thoroughly familiar with this vehicle. Pay particular attention to all Notices, Cautions, Warnings, and Dangers.

SECTION **PAGE NO.**

SAFETY **1-1**

GENERAL SPECIFICATIONS **2-1**

INTRODUCTION **3-1**

OPERATING PROCEDURES **4-1**

MAINTENANCE **5-1**

DELCARATION OF CONFORMITY ..... **APPENDIX A-1**

TABLE OF CONTENTS

Read all of this manual to become thoroughly familiar with this vehicle. Pay particular attention to all Notices, Cautions, Warnings, and Dangers.

Notes:

Read all of this manual to become thoroughly familiar with this vehicle. Pay particular attention to all Notices, Cautions, Warnings, and Dangers.

TITLE **PAGE NO.**

SAFETY **1-3**

NOTICES, CAUTIONS, WARNINGS, AND DANGERS **1-3**

GENERAL **1-5**

GENERAL OPERATION **1-5**

MAINTENANCE **1-6**

VENTILATION **1-6**

LABELS AND PICTOGRAMS **1-7**

Read all of this manual to become thoroughly familiar with this vehicle. Pay particular attention to all Notices, Cautions, Warnings, and Dangers.

1

Notes:

SAFETY

For any questions on material contained in this manual, contact an authorized representative for clarification.

Read and understand all labels located on the vehicle. Always replace any damaged or missing labels.

On steep hills it is possible for vehicles to coast at greater than normal speeds encountered on a flat surface. To prevent loss of vehicle control and possible serious injury, speeds should be limited to no more than the maximum speed on level ground. See GENERAL SPECIFICATIONS. Limit speed by applying the service brake.

Catastrophic damage to the drivetrain components due to excessive speed may result from driving the vehicle above specified speed. Damage caused by excessive speed may cause a loss of vehicle control, is costly, is considered abuse and will not be covered under warranty.

Use extra caution when towing the vehicle(s). Do not tow a single vehicle at speeds in excess of 12 mph (19 kph). Do not tow more than three vehicles at a time. Do not exceed 5 mph (8 kph) while towing multiple vehicles. Towing the vehicle at above the recommended speed may result in personal injury and/or damage to the vehicle and other property. Vehicles equipped with the AC Drive motor must be towed with the Run-Tow switch, located under the passenger seat, in the 'Tow' position.

If the vehicle is to be used in a commercial environment, signs similar to the ones illustrated should be used to warn of situations that could result in an unsafe condition.

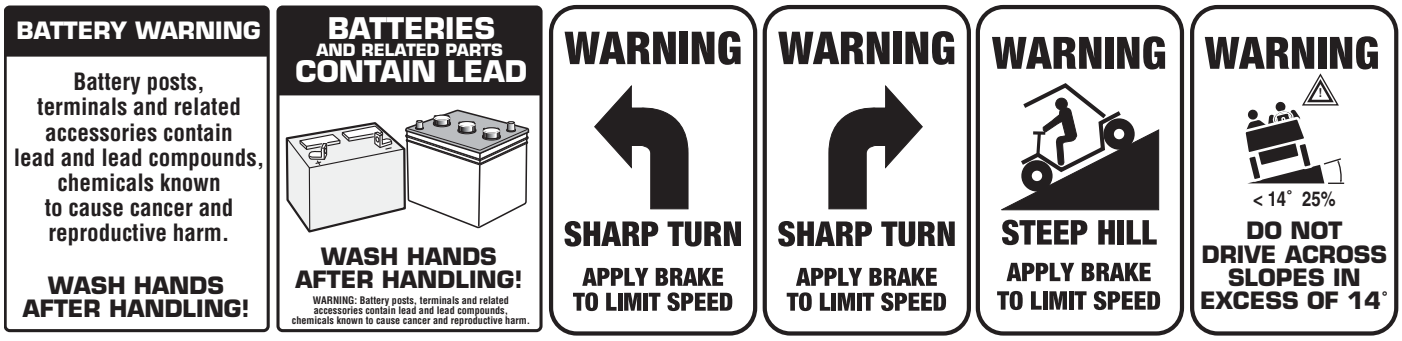

Observe these **NOTICES, CAUTIONS, WARNINGS** and **DANGERS**; be aware that servicing a vehicle requires mechanical skill and a regard for conditions that could be hazardous. Improper service or repair may damage the vehicle or render it unsafe.

NOTICES, CAUTIONS, WARNINGS, AND DANGERS

Throughout this guide **NOTICE, CAUTION, WARNING,** and **DANGER** will be used. Please observe these **NOTICES, CAUTIONS, WARNINGS,** and **DANGERS;** be aware that servicing a vehicle requires mechanical skill and a regard for conditions that could be hazardous. Improper service or repair may damage the vehicle or render it unsafe.

NOTICE

Address practices not related to personal injury.

⚠ CAUTION

Indicates a hazardous situation which, if not avoided, could result in minor or moderate injury.

⚠ WARNING

Indicates a hazardous situation which, if not avoided, could result in death or serious injury.

⚠ DANGER

Indicates a hazardous situation which, if not avoided, will result in death or serious injury.

⚠ WARNING

Engine exhaust from this product contains chemicals known, in certain quantities, to cause cancer, birth defects, or other reproductive harm.

NOTICE

The exhaust emissions of this vehicles' engine complies with regulations set forth by the Environmental Protection Agency (EPA) of the United States of America (USA) at time of manufacture. Significant fines could result from modifications or tampering with the engine, fuel, ignition or air intake systems

⚠ WARNING

Battery posts, terminals and related accessories contain lead and lead compounds. Wash hands after handling.

NOTICE

This spark ignition system meets all requirements of the Canadian Interference-Causing Equipment Regulations.

This manual has been designed to assist in maintaining the vehicle in accordance with procedures developed by the manufacturer. Adherence to these procedures and troubleshooting tips will ensure the best possible service from the product. To reduce the chance of personal injury or property damage, the following must be carefully observed:

⚠ CAUTION

Certain replacement parts can be used independently and/or in combination with other accessories to modify an E-Z-GO-manufactured vehicle to permit the vehicle to operate at or in excess of 20mph. When an E-Z-GO-manufactured vehicle is modified in any way by the Distributor, Dealer or customer to operate at or in excess of 20mph, UNDER FEDERAL LAW the modified product will be a Low Speed Vehicle (LSV) subject to the strictures and requirements of Federal Motor Vehicle Safety Standard 571.500. In these instances, pursuant to Federal law the Distributor or Dealer MUST equip the product with headlights, rear lights, turn signals, seat belts, top, horn and all other modifications for LSV's mandated in FMVSS 571.500, and affix a Vehicle Identification Number to the product in accordance with the requirements of FMVSS 571.565. Pursuant to FMVSS 571.500, and in accordance with the State laws applicable in the places of sale and use of the product, the Distributor, Dealer or customer modifying the vehicle also will be the Final Vehicle Manufacturer for the LSV, and required to title or register the vehicle as mandated by State law.

E-Z-GO will NOT approve Distributor, Dealer or customer modifications converting E-Z-GO products into LSV's.

The Company recommends that all E-Z-GO products sold as personal transportation vehicles BE OPERATED ONLY BY PERSONS WITH VALID DRIVERS LICENSES, AND IN ACCORDANCE WITH APPLICABLE STATE REQUIREMENTS. This restriction is important to the SAFE USE AND OPERATION of the product.

All customers should adhere to this SAFETY RESTRICTION, in connection with the use of all E-Z-GO products, new and used, the Distributor or Dealer has reason to believe may be operated in personal transportation applications.

Information on FMVSS 571.500 can be obtained at Title 49 of the Code of Federal Regulations, section 571.500, or through the Internet at the website for the U.S. Department of Transportation - at Dockets and Regulation, then to Title 49 of the Code of Federal Regulations (Transportation).

Read all of this manual to become thoroughly familiar with this vehicle. Pay particular attention to all Notices, Cautions, Warnings, and Dangers.

GENERAL

All vehicles can be used for a variety of tasks beyond the original intended use of the vehicle; therefore, it is impossible to anticipate and warn against every possible combination of circumstances that may occur. No warning can take replace good common sense and prudent driving practices.

Good common sense and prudent driving practices do more to prevent accidents and injury than all of the warnings and instructions combined. E-Z-GO strongly suggests that all users and maintenance personnel read this entire manual paying particular attention to the CAUTIONS, WARNINGS and DANGERS contained therein.

If you have any questions regarding this vehicle, contact your E-Z-GO dealer or write to the address on the back cover of this publication, Attention: Customer Care Department.

E-Z-GO reserves the right to make design changes without obligation to make these changes on units previously sold. The information contained in this manual is subject to change without notice.

E-Z-GO IS NOT LIABLE FOR ERRORS IN THIS MANUAL. E-Z-GO IS NOT LIABLE FOR INCIDENTAL OR CONSEQUENTIAL DAMAGES THAT RESULT FROM THE USE OF THE MATERIAL IN THIS MANUAL.

This vehicle conforms to the current applicable standard(s) for safety and performance requirements.

These vehicles are designed and manufactured for off-road use. They DO NOT conform to Federal Motor Vehicle Safety Standards of the United States of America (USA) and are not equipped for operation on public streets. Some communities may permit these vehicles to be operated on their streets on a limited basis and in accordance with local ordinances.

With electric powered vehicles, be sure that all electrical accessories are grounded directly to the battery (-) post. **Never use the chassis or body as a ground connection.**

Refer to GENERAL SPECIFICATIONS for vehicle seating capacity.

Never modify the vehicle in any way that will alter the weight distribution of the vehicle, decrease its stability or increase the speed or extend the stopping distance beyond the factory specification. Such modifications can result in serious personal injury or death.

Do not make any such modifications or changes. E-Z-GO prohibits and disclaims responsibility for all such modifications or and alterations which would adversely affect the safety of the vehicle.

Vehicles that are capable of higher speeds must limit their speed to no more than the speed of other vehicles when used in a golf course environment. Additionally, speed should be further moderated by the environmental conditions, terrain and common sense.

Operation of the vehicle is limited to persons above the height of 59 inches (150 cm).

GENERAL OPERATION

ALWAYS:

- use the vehicle in a responsible manner and maintain the vehicle in safe operating condition
- read and observe all warnings and operation instruction labels affixed to the vehicle
- follow all safety rules established in the area where the vehicle is being operated
- Leave the vehicle when there is a risk of lightning
- reduce speed to compensate for poor terrain or conditions

- apply service brake to control speed on steep grades
- maintain adequate distance between vehicles
- maintain adequate distance between vehicles
- reduce speed in wet areas
- use extreme caution when approaching sharp or blind turns
- use extreme caution when driving over loose terrain
- use extreme caution in areas where pedestrians are present

MAINTENANCE

ALWAYS:

- replace damaged or missing warning, caution or information labels
- maintain the vehicle in accordance with the manufacturer's periodic service schedule
- ensure that repairs are performed by trained and qualified personnel
- follow the manufacturer's maintenance procedures
- insulate any tools used within the battery area in order to prevent sparks or battery explosion
- check the polarity of each battery terminal and be sure to rewire the batteries correctly
- use specified replacement parts, NEVER use replacement parts of lesser quality
- use recommended tools
- determine that tools and procedures not specifically recommended by the manufacturer will not compromise the safety of personnel nor jeopardize the safe operation of the vehicle
- support the vehicle using wheel chocks and jack stands, NEVER get under a vehicle that is supported by a jack, lift the vehicle in accordance with the manufacturer's instructions
- maintain the vehicle in an area away from exposed flame or persons who are smoking
- be aware that a vehicle that is not performing as designed is a potential hazard and must not be operated
- test drive the vehicle after any repairs or maintenance in a safe area that is free of both vehicular and pedestrian traffic
- keep complete records of the maintenance history of the vehicle

The manufacturer cannot anticipate all situations, therefore people attempting to maintain or repair the vehicle must have the skill and experience to recognize and protect themselves from potential situations that could result in severe personal injury or death and damage to the vehicle. Use extreme caution and, if unsure as to the potential for injury, refer the repair or maintenance to a qualified mechanic.

VENTILATION

Always store gasoline vehicles in a well ventilated area. Ventilation prevents gasoline fumes from accumulating.

Never fuel a vehicle in an area that is subject to flame or spark. Pay particular attention to natural gas or propane water heaters and furnaces.

Never work around or operate a vehicle in an environment that does not ventilate exhaust gases from the area. Carbon monoxide is a dangerous gas that can cause unconsciousness and is potentially lethal.

Read all of this manual to become thoroughly familiar with this vehicle. Pay particular attention to all Notices, Cautions, Warnings, and Dangers.

LABELS AND PICTOGRAMS

614121

601781

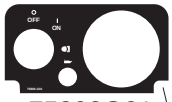

75808G01

AUTHORIZED REPRESENTATIVE IN EC IS:

RANSOMES JACOBSEN LTD.
WEST ROAD, IPSWICH,
SUFFOLK, IP3 9TT, UK

614068

614068

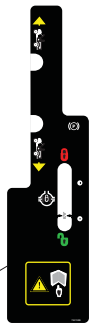

75970G01

28203G01

74093G01

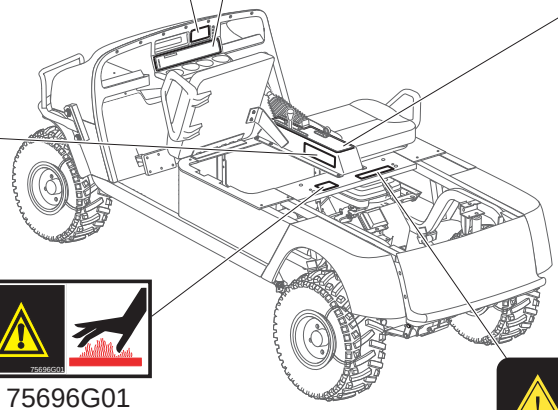

75696G01

EGWHL14

608862

27653G01

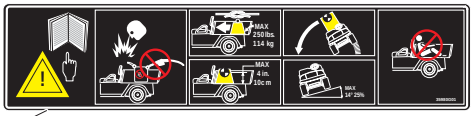

PLASTIC - 74821G01
ALLUMINIUM - 35980G02

71489G01

35493G01

1.

WARNING

2. 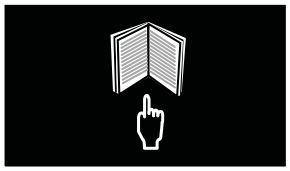

READ MANUAL

3.

WARNING
USE CAUTION IN
INCLEMENT WEATHER

4.

WARNING
DO NOT OPERATE
UNDER THE INFLUENCE
OF DRUGS OR ALCOHOL

5.

MAXIMUM
CROSS HILL/RAMP
ANGLE AS SPECIFIED

6.

WARNING
MAXIMUM CROSS
HILL/RAMP ANGLE
AS SPECIFIED

7. 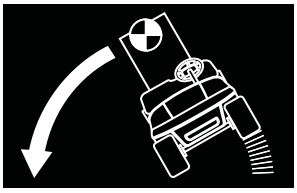

LOAD WITH
HIGH CENTER
OF GRAVITY
COULD RESULT
IN TIP OVER

8. 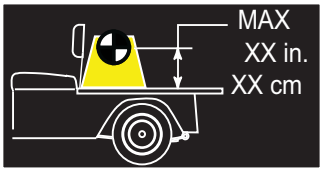

LOAD
CENTER
OF GRAVITY,
MAXIMUM
HEIGHT

9. 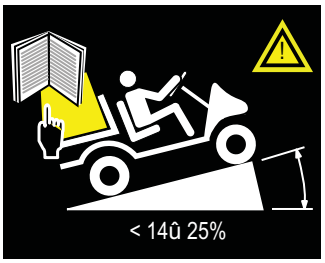

WARNING
READ MANUAL
FOR MAXIMUM
LOAD BED
CAPACITY.
MAXIMUM RAMP/HILL

10. 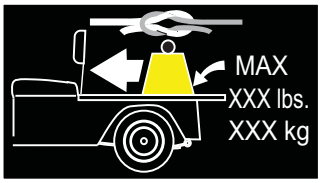

SECURE LOAD
AS FAR FORWARD
AS POSSIBLE.
MAXIMUM LOAD BED
CAPACITY

11.

DO NOT RIDE IN
LOAD BED

12.

DANGER OF EXPLOSION
DO NOT FILL GAS CAN
IN LOAD BED

13. 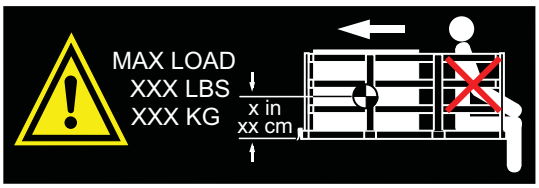

WARNING
MAXIMUM LOAD
& CENTER OF
GRAVITY.
KEEP LOAD
AS FAR
FORWARD AS
POSSIBLE.
DO NOT RIDE
IN LOAD BED

14. 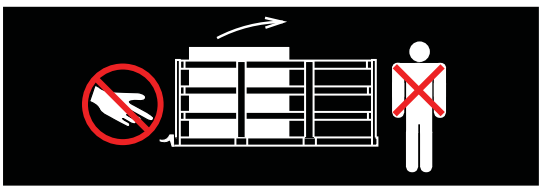

KEEP HANDS &
FINGERS AWAY
FROM DUMP BED.
DO NOT STAND
BEHIND DUMP
BED

NOTE: All Pictograms may not apply to your product

Ref Pic 1-1

Read all of this manual to become thoroughly familiar with this vehicle. Pay particular attention to all Notices, Cautions, Warnings, and Dangers.

15.

CLEAN UP GASOLINE SPILLS WITH WATER BEFORE STARTING ENGINE

16.
UNLEADED GASOLINE

17.
DO NOT SPILL FUEL ON A HOT ENGINE

18.
GROUND FUEL PUMP

19.
LOW OIL PRESSURE

20.
NEGATIVE GROUND BATTERY

21.
DO NOT CONNECT POSITIVE BATTERY TERMINAL TO GROUND

22.
SHORTING BATTERY TERMINALS MAY CAUSE EXPLOSION

23.
NO TAMPERING. KEEP HANDS OUT

24.
WARNING CORROSIVE

25.
WARNING EXPLOSIVE

26.
WARNING LETHAL VOLTAGE

27.
DO NOT EXPOSE TO FLAME

28.
DO NOT DISPOSE OF BATTERIES IN LANDFILL

29.
DO NOT DRIVE ON HIGHWAY

30. 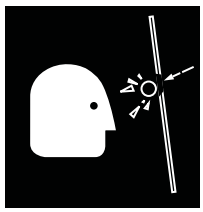
WINDSHIELDS DO NOT PROVIDE PROTECTION FROM FLYING OBJECTS

31.
BATTERIES ARE HEAVY. USE CARE LIFTING

32.
USE INSULATED TOOLS

33.
WEAR EYE PROTECTION

34.
NO SMOKING

35.
HOT SURFACE

NOTE: All Pictograms may not apply to your product

Ref Pic 1-2

36.

OPERATE
FROM
DRIVERS SIDE
ONLY

37.

KEEP ARMS
AND LEGS
WITHIN VEHICLE

38. 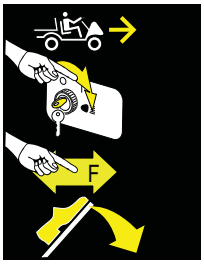

TO OPERATE VEHICLE IN FORWARD:
TURN KEY TO ON
MOVE DIRECTION SELECTOR TO FORWARD
DEPRESS ACCELERATOR PEDAL AND ACCELERATE SMOOTHLY

39. 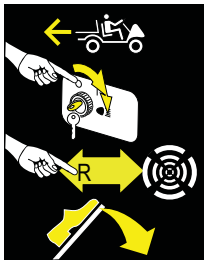

TO OPERATE VEHICLE IN REVERSE:
TURN KEY TO ON
MOVE DIRECTION SELECTOR TO REVERSE
AN AUDIBLE DEVICE WILL SOUND
DEPRESS ACCELERATOR PEDAL AND ACCELERATE SMOOTHLY

40. 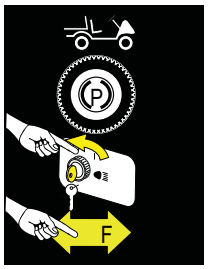

TO LEAVE A GASOLINE POWERED VEHICLE IN PARK:
APPLY PARKING BRAKE
TURN KEY TO OFF
MOVE DIRECTION SELECTOR TO FORWARD

41. 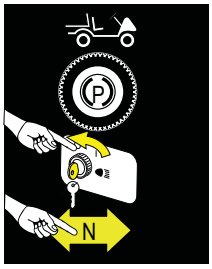

TO LEAVE AN ELECTRIC POWERED VEHICLE IN PARK:
APPLY PARKING BRAKE
TURN KEY TO OFF
MOVE DIRECTION SELECTOR TO NEUTRAL

42. 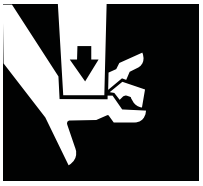

KEEP CLEAR
HAND OR
FINGERS CAN
BE TRAPPED

43.

ON
POSITION

44.

OFF
POSITION

45.

HEADLIGHTS

46.

UNLOCKED

47.

LOCKED

48. 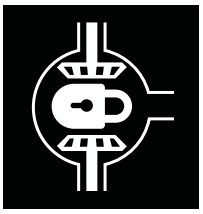

DIFFERENTIAL
LOCKED

49.

WARNING
KEEP ENTIRE BODY
INSIDE CAR

50. 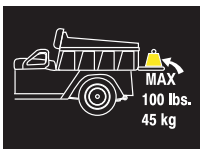

MAXIMUM
TAILGATE
LOAD

NOTE: All Pictograms may not apply to your product

Ref Pic 1-3

Read all of this manual to become thoroughly familiar with this vehicle. Pay particular attention to all Notices, Cautions, Warnings, and Dangers.

51.

ENGINE CRANKING POSITION

52.
PULL HANDLE UP TO ENGAGE PARK BRAKE

53. 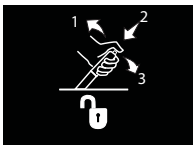

PULL HANDLE UP, PUSH BUTTON IN, PUSH HANDLE DOWN TO RELEASE PARK BRAKE

54.
WARNING
READ OWNER'S MANUAL BEFORE OPERATING VEHICLE IN FORWARD OR REVERSE

55. 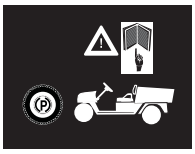
WARNING
READ OWNER'S MANUAL BEFORE PARKING VEHICLE AND LEAVING IT UNATTENDED

56. 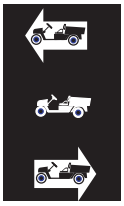
FORWARD

NEUTRAL

REVERSE

57. 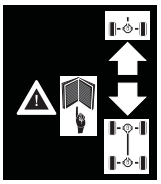
WARNING
READ OWNER'S MANUAL BEFORE ENGAGING TWO OR FOUR WHEEL DRIVE

58. 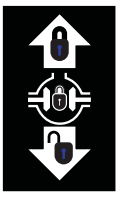
PUSH TOP OF SWITCH TO LOCK DIFFERENTIAL

PUSH BOTTOM OF SWITCH TO UNLOCK DIFFERENTIAL

59. 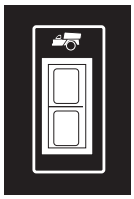
REAR DIFFERENTIAL LOCK SWITCH

60. 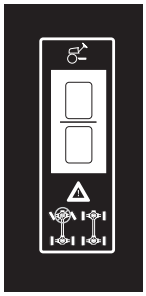
FRONT DIFFERENTIAL LOCK SWITCH.
WARNING
READ OWNER'S MANUAL BEFORE ENGAGING FRONT DIFFERENTIAL LOCK.
DO NOT ENGAGE LOCK WHILE FRONT WHEELS ARE TURNED AND VEHICLE IS AT SPEED.

61.
PUSH TOP PART OF SWITCH TO RAISE LOAD BED

PUSH BOTTOM PART OF SWITCH TO LOWER LOAD BED

62.
AUXILIARY LIGHTS

63.
HORN BUTTON

63. 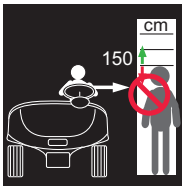

MINIMUM HEIGHT TO OPERATE VEHICLE IS 59 INCHES (150 CM)

63.
DO NOT OPERATE VEHICLE WHEN LIGHTNING IS IN THE AREA

NOTE: All Pictograms may not apply to your product

Ref Pic 1-4

Read all of this manual to become thoroughly familiar with this vehicle. Pay particular attention to all Notices, Cautions, Warnings, and Dangers.

Notes:

GENERAL SPECIFICATIONS

Read all of this manual to become thoroughly familiar with this vehicle. Pay particular attention to all Notices, Cautions, Warnings, and Dangers.

TITLE	PAGE NO.
Vehicle Specifications	2 - 3
Vehicle Dimensions	2 - 4
Vehicle Incline Information and Turning Diameter	2 - 5

Read all of this manual to become thoroughly familiar with this vehicle. Pay particular attention to all Notices, Cautions, Warnings, and Dangers.

Notes:

Read all of this manual to become thoroughly familiar with this vehicle. Pay particular attention to all Notices, Cautions, Warnings, and Dangers.

E-Z-GO A Textron Company

MODEL: TERRAIN 1500
TYPE: GASOLINE POWERED TRUCK
MODEL YEAR: 2012
Part No:. 618860

PRODUCT SPECIFICATION

CONFIGURATION HIGHLIGHTS

Engine: 16 hp (11.9 kW) rated, 4 cycle, 29.2 ci (480 cc) V-Twin, air-cooled Vanguard

- **Valve Train:** Overhead valve
- **Lubrication:** Pressurized oil system, spin-on oil filter
- **Balancer:** Internal counter rotating balance shaft
- **Fuel System:** Fixed float bowl with remote pulse fuel pump
- **Ignition:** Electronic spark/magneto
- **Air Cleaner:** Replaceable dry cartridge w/permanent pre-filter/remote air

Electrical: Starter/Generator, solid-state regulator, 12 Volt maintenance free battery (525 CCA, 60 minute reserve)
Drive Train: Automatic, continuously variable transmission (CVT). Locking rear axle (Operator selectable from center console)
Brakes: Dual rear wheel hydraulic self-adjusting drum brakes. Hand operated park brake located in center console
Transaxle: Differential with helical gears, ground speed governor, forward/reverse
Seating: Two bucket seats
Cargo Bed: Roto-molded cross-linked polyethelene. Lifts for access to powertrain. Removable hinged multi-position tailgate requires no latch mechanism

PRODUCT OVERVIEW

Dimensions	
Overall Length	110.5 in (281.0 cm)
Overall Width	50.0 in (127.0 cm)
Overall Height (No Canopy)	49.0 in (125.0 cm) (Top of steering wheel)
Overall Height (With Canopy)	75.0 in (191.0 cm)
Wheel Base	78.5 in (199.0 cm)
Front Wheel Track	38.0 in (96.0 cm)
Rear Wheel Track	38.5 in (97.0 cm)
Gnd Clearance @ Differential	6.0 in (15.0 cm)
Cargo Box Width (inside)	44.0 in (112.0 cm)
Cargo Box Length (inside)	36.0 in (91.0 cm)
Cargo Box Depth (inside)	10.5 in (27.0 cm)
Cargo Box Capacity	9.6 cu ft (0.27 m3)
Cargo Box Material	Roto-molded polyethylene

Vehicle Power	
Power Source	4 cycle, 29.2 ci (480 cc)
Valve Train	V Twin Cylinder OHV
Horsepower (kW)	16.0 hp (11.9 kW) rated
Electrical System	Starter/Generator, solid-state regulator
Battery (Qty, Type)	One 12 Volt maintenance free
Key or Pedal Start	Pedal Start
Air Cleaner	Dry cartridge w/permanent pre-filter/remote air
Lubrication	Pressurized oil system
Oil Filter	Spin-on oi filter
Cooling System	Air cooled
Fuel Capacity	5.8 gallon (22.0 L) tank
Drive Train	Continuously variable transmission (CVT)
Differential	Helical gears with manual lock-up

Vehicle Power Cont.	
Gear Selection	Forward-Reverse
Rear Axle Ratio	13.32:1

Performance	
Seating Capacity	2 Persons
Dry Weight	1110 lb (505 kg)
Curb Weight	1150 lb (525 kg)
Bed Load Capacity	500 lb (225 kg)
Vehicle load capacity	800 lb (360 kg)
Outside Clearance Circle	23.5 ft (7.2 m)
Intersecting Aisle Clearance	N/A
Speed (Level Ground)	16 mph ± 0.5 mph (25.7 kph ± 0.8 kph)
Towing Capacity	500 lb (225 kg)

Steering & Suspension	
Steering	Self-compensating rack and pinion
Front Suspension	Leaf springs with hydraulic shock absorbers
Rear Suspension	Leaf springs with hydraulic shock absorbers
Service Brake	Rear wheel hydraulic self-adjusting drum
Parking Brake	Hand operated
Front Tires	Stryker 22 x 9 - 10 Uni-Directional
Rear Tires	Stryker 22 x 9 - 10 Uni-Directional

Body & Chassis	
Frame	Welded steel with DuraShield™ powder coat
Front Body & Finish	Injection Molded TPO
Rear Body & Finish	Steel. Base coat/clear coat
Standard Color	Hunter Green

Noise & Vibration	
Noise	Sound pressure; continued A-weighted equal to or less than 80 db(A)
Vibration, WBV	Highest RMS value of weighted acceleration is 1.25 m/s^2
Vibration, HAV	Highest RMS value of weighted acceleration is less than 2.5 m/s^2 The uncertainty of measurement is 0.24 m/s^2

Some items shown may be optional equipment

Specifications are subject to change without notice
* Field installed accessories may require installation charges

GENERAL SPECIFICATIONS

Read all of this manual to become thoroughly familiar with this vehicle. Pay particular attention to all Notices, Cautions, Warnings, and Dangers.

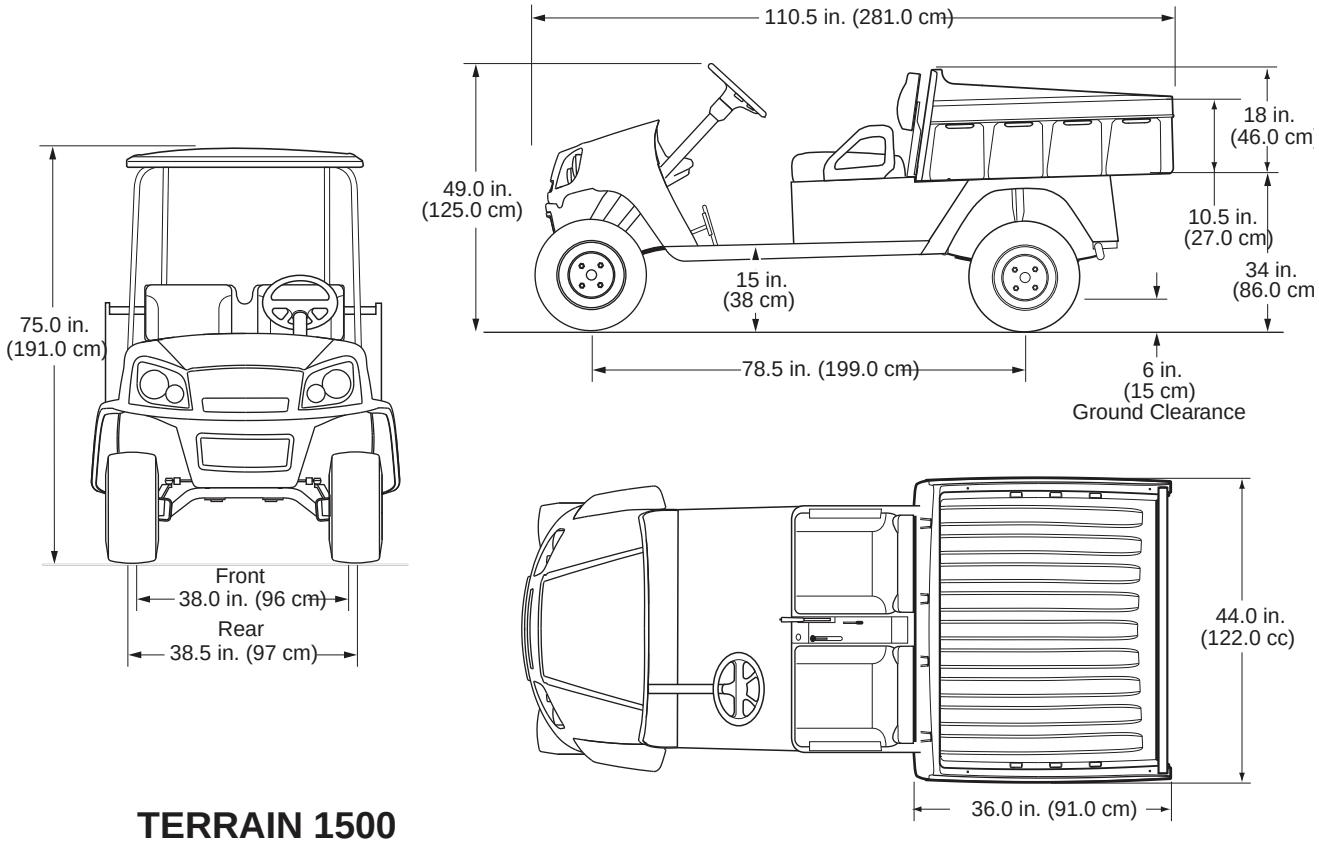

TERRAIN 1500

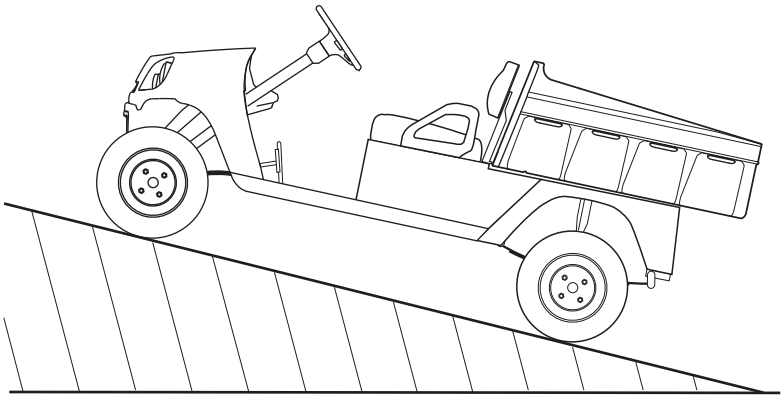

Maximum Recommended Ramp Grade
25% or 14° Max.

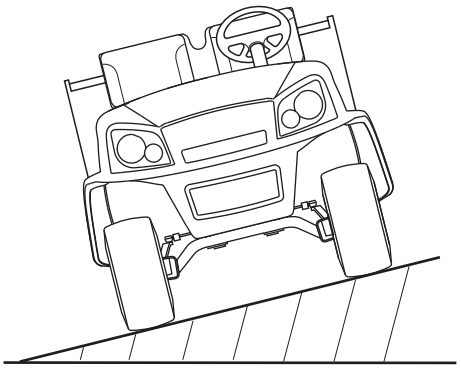

Maximum Recommended Side Tilt
25% or 14° Max.

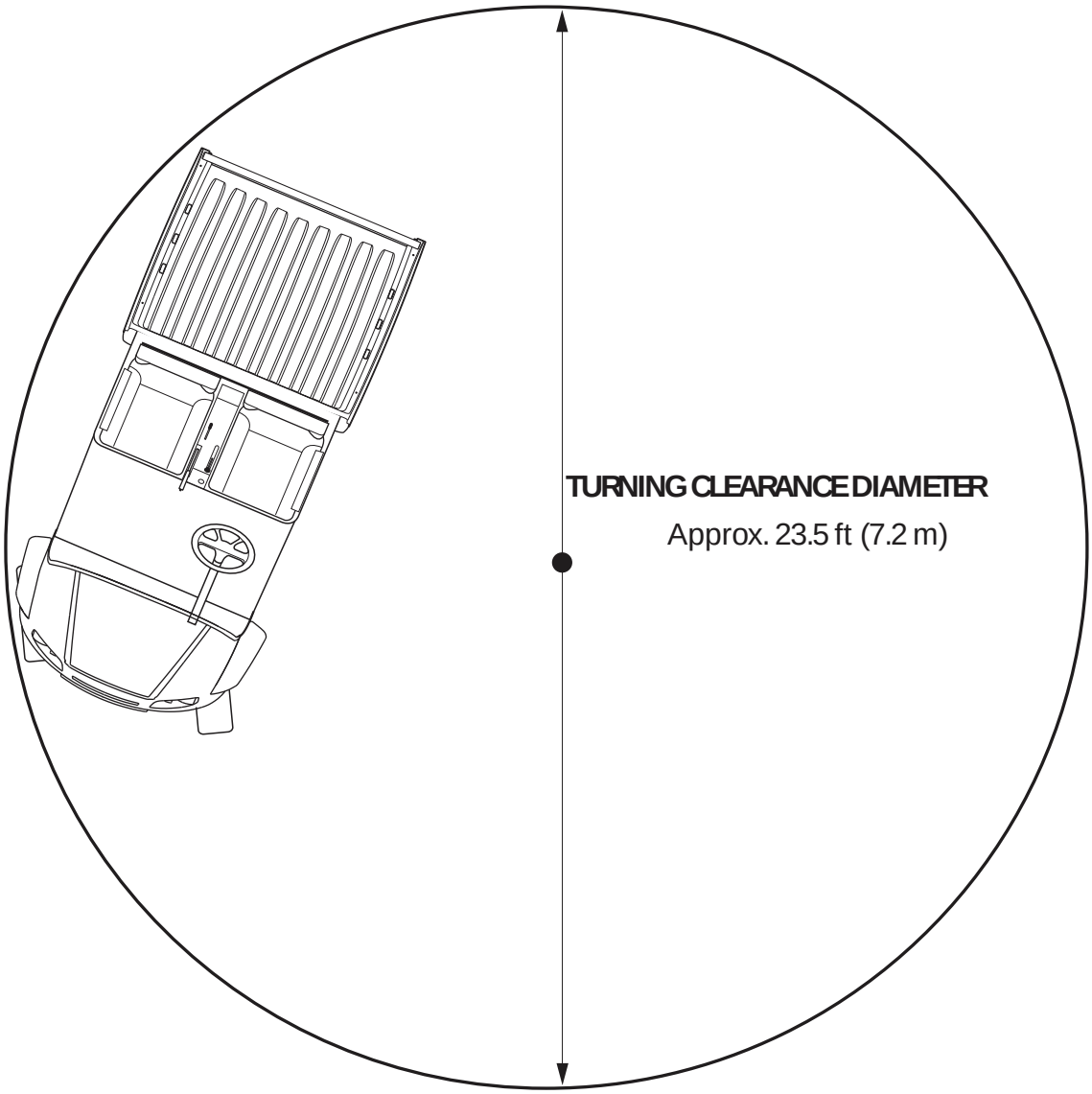
TURNING CLEARANCE DIAMETER
Approx. 23.5 ft (7.2 m)

Read all of this manual to become thoroughly familiar with this vehicle. Pay particular attention to all Notices, Cautions, Warnings, and Dangers.

Notes:

INTRODUCTION

Read all of this manual to become thoroughly familiar with this vehicle. Pay particular attention to all Notices, Cautions, Warnings, and Dangers.

TITLE **PAGE NO.**

FEATURES..... 3-3

General Information 3-3

Key Switch / Headlight Switch..... 3-3

Low Oil Pressure Indicator Light 3-4

Fuel Gauge 3-4

Direction Selector..... 3-4

Accelerator Pedal..... 3-4

Park Brake 3-4

Differential Lock 3-5

Horn 3-5

12Volt Power Outlet 3-5

Rear View Mirror 3-5

Front Seats..... 3-5

Hip restraint - front 3-6

Brake Light/Turn Signal..... 3-6

Glove Box..... 3-7

Cup Holder 3-7

Steering Wheel..... 3-7

Choke..... 3-7

Toggle Switch..... 3-7

Read all of this manual to become thoroughly familiar with this vehicle. Pay particular attention to all Notices, Cautions, Warnings, and Dangers.

Notes:

Read all of this manual to become thoroughly familiar with this vehicle. Pay particular attention to all Notices, Cautions, Warnings, and Dangers.

FEATURES

General Information

NOTICE

If the vehicle is equipped with factory installed custom accessories, some accessories remain operational with the key switch in the 'OFF' position.

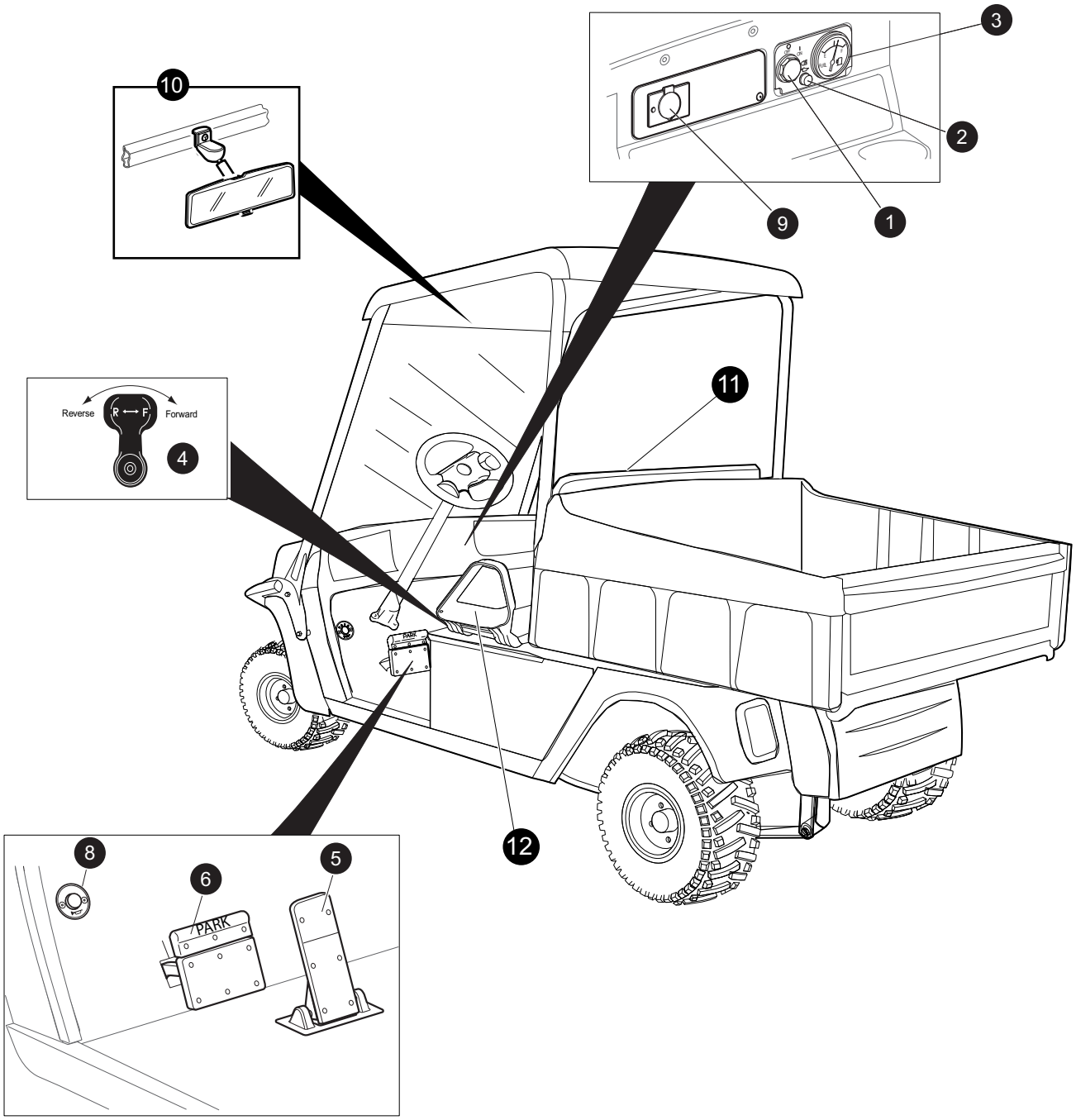

1. Key Switch / Headlight Switch

Located on the dash panel, this switch enables the basic electrical system of the vehicle to be turned on and off by turning the key. The lights will illuminate only when the key is moved to the light icon.

To prevent inadvertent operation of the vehicle when left unattended, the key should be turned to the 'OFF' position and removed.

2. Low Oil Pressure Indicator Light

A low oil pressure indicator light is located to the right side of the key/light switch on the dash panel. The light illuminates when the oil pressure is low. Check oil level. If oil level is between ADD and FULL mark on dipstick, a mechanical problem exists within the engine and the vehicle **must not be driven**. Contact a local distributor or authorized branch

3. Fuel Gauge

An electric fuel gauge is located to the right side of the key/light switch. It indicates the amount of fuel in the tank.

4. Direction Selector

⚠ CAUTION

To reduce the possibility of component damage, the vehicle must be completely stopped before moving the direction selector.

Located on the seat support panel, this lever permits the selection of either 'F' (forward) or 'R' (reverse). Neutral is the straight up position between forward and reverse. Vehicle should be left in 'F' when unattended.

5. Accelerator Pedal

⚠ WARNING

Unintentional movement of the accelerator pedal will release the park brake and may cause the vehicle to move which could result in severe injury or death.

With the key switch 'ON', depressing the accelerator pedal starts the engine. When the pedal is released, the engine will stop. To stop the vehicle more quickly, depress the service brake.

If key switch is 'ON' and park brake is set, depressing the accelerator inadvertently will release the park brake and will cause the vehicle to move which could cause severe injury or death.

Depressing the accelerator pedal will release the park brake if it is engaged. This is a feature to assure the vehicle is not driven with the park brake engaged. Depressing the accelerator pedal is **not** the preferred method of releasing the park brake.

NOTICE

*Depressing the **lower section of the brake pedal** is the preferred method of releasing the park brake to assure the longest service life of brake components.*

6. Park Brake

The hand operated parking brake is located on the console between the front seats. The brake is engaged when the handle is raised and disengaged when the handle is parallel to the seat bottom.

When leaving the vehicle unattended, engage the parking brake by raising the handle until it locks in place. To release the parking brake, depress the release button in the end of the handle while slightly raising the handle, then lower the parking brake handle.

7. Differential Lock

The rear drive axle is equipped with a manually operated locking differential. With the differential unlocked, if one drive wheel looses traction, all available power is transferred to that wheel until it regains traction. With the differential locked, power is distributed to both drive wheels at all times.

NOTICE

The differential lock should only be used when additional traction is required. Continued use of the differential lock may cause excessive wear to the rear tires.

⚠ CAUTION

The vehicle must be completely stopped before engaging or disengaging the differential lock. Failure to stop will damage the differential.

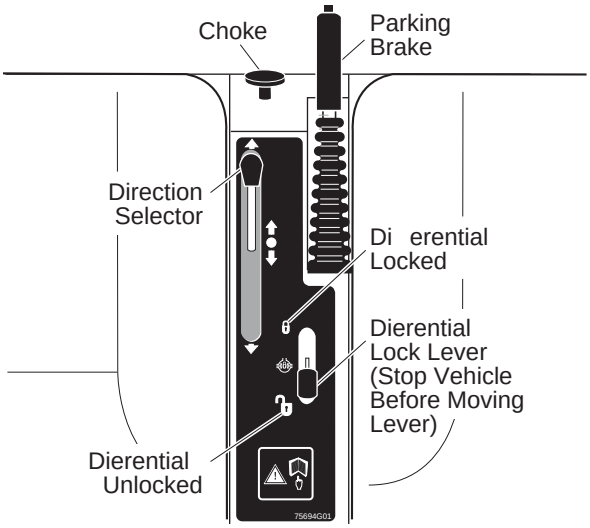

Console Controls

To engage the differential lock, stop vehicle and push the lock lever forward towards the red ‘locked’ symbol.

To disengage the differential lock, stop the vehicle and push the differential lock lever backward towards the green ‘unlocked’ symbol. After unlocking, the differential may remain locked if driving is resumed in a straight line. This is a normal occurrence caused by pressure remaining against the gears and not allowing the locking mechanism to release. To avoid this, simply turn the vehicle as acceleration begins or accelerate in reverse.

8. Horn

The horn is operated by pushing the horn button located on the floor to the left of the brake pedal.

9. 12Volt Power Outlet

⚠ CAUTION

Overuse of accessories may drain the battery and leave insufficient reserve to start the vehicle.

A 12 volt power outlet is located to the left side of the key/light switch. It provides constant power for accessories equipped with a 12 volt plug.

10. Rear View Mirror

The rear view mirror is a two-position mirror manually adjusted for day and nighttime conditions.Sun Top kit is required to install rear view mirror.

11. Front Seats

The split bench front seat is designed for one occupant on each side of the center console.

12. Hip Restraint - Front

The front hip restraints are designed to help keep the occupants properly positioned in the event of sudden vehicle position changes.

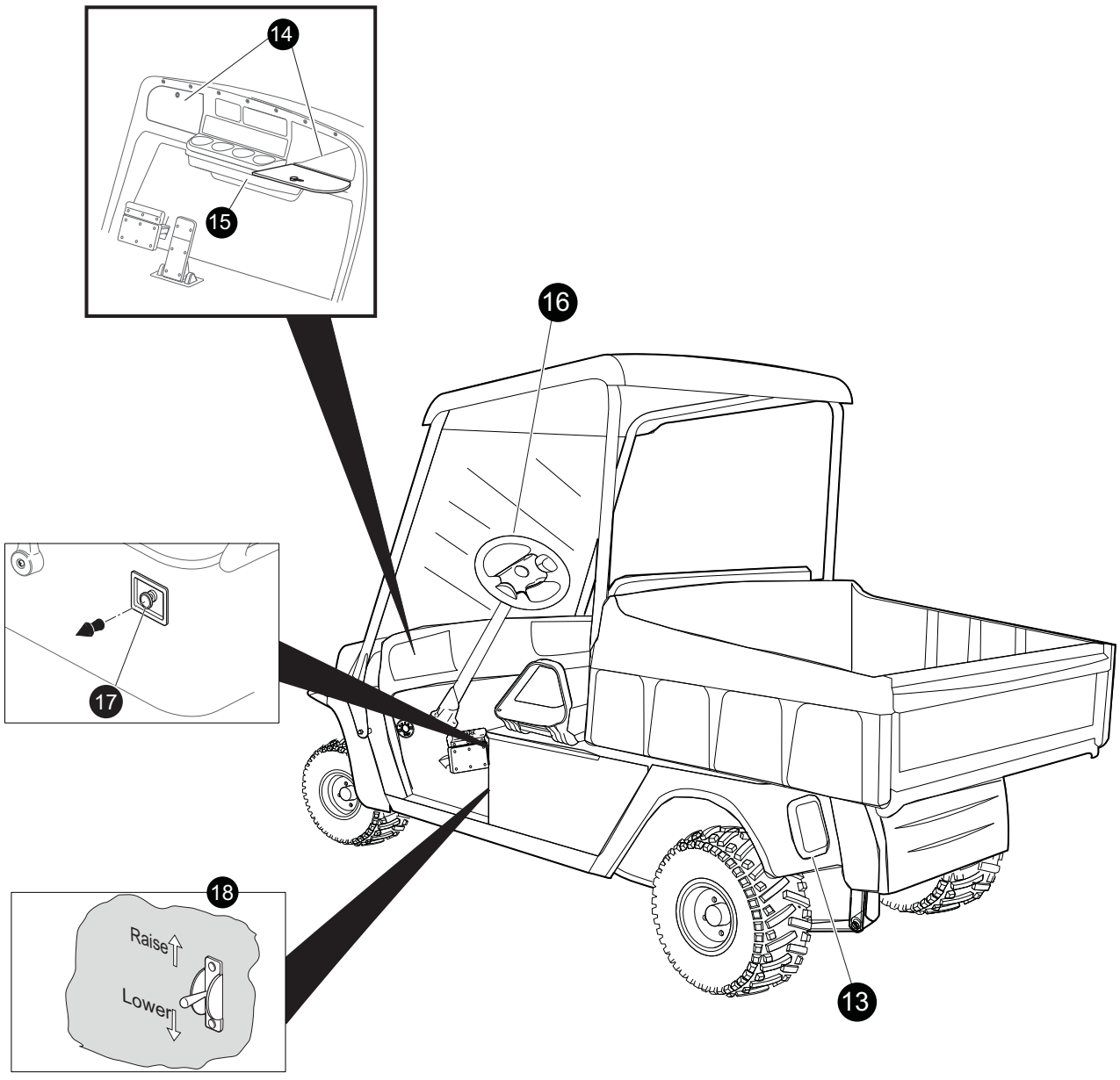

13. Brake Light/Turn Signal

The combination brake light/turn signal assemblies are located on the rear fenders.

14. Glove Box

A passenger-side locking glove box is standard, driver-side is offered as an option. A separate key is used for the locking glove boxes.

15. Cup Holder

A cup holder is provided for convenience of both the driver and passenger.

16. Steering Wheel

The steering wheel located in front of the driver seat is used to steer the vehicle. The steering wheel is also installed with scorecard holder assembly.

17. Choke

Located on the console between the front seats the choke is used to aid cold starting. See ‘Cold Starting for instructions on using the choke properly.

⚠ WARNING

To prevent severe injury or death, rear seat passengers should hold on to both the hip restraints and the rear hand hold when the vehicle is in motion. Always be sure that all passengers are seated and holding on before operating vehicle.

18. Toggle Switch

The toggle switch is located on the driver side of the front seat panel. Move the electric lift toggle switch up to raise the dump bed and down to lower the dump bed.

Read all of this manual to become thoroughly familiar with this vehicle. Pay particular attention to all Notices, Cautions, Warnings, and Dangers.

Notes:

OPERATING PROCEDURES

Read all of this manual to become thoroughly familiar with this vehicle. Pay particular attention to all Notices, Cautions, Warnings, and Dangers.

TITLE **PAGE NO.**

SERIAL NUMBER LOCATION **4-3**

BEFORE INITIAL USE **4-4**

OPERATING THE VECHILE **4-5**

RUN - IN **4-5**

COLD STARTING **4-6**

STARTING AND DRIVING **4-7**

STARTING THE VECHILE WITH DISCHARGED BATTERY **4-7**

COASTING **4-8**

FUEL **4-8**

BATTERY **4-9**

SUN TOP AND WINDSHEILD **4-9**

TOWING A TRAILER **4-9**

TERRAIN **4-9**

DUMP BED **4-10**

OPTIONAL WINCH **4-10**

Operation of the Winch 4-10

Winch Application 4-11

Read all of this manual to become thoroughly familiar with this vehicle. Pay particular attention to all Notices, Cautions, Warnings, and Dangers.

Notes:

Read all of this manual to become thoroughly familiar with this vehicle. Pay particular attention to all Notices, Cautions, Warnings, and Dangers.

SERIAL NUMBER LOCATION

Two serial number and manufacture date code plates are on the vehicle. One is placed on the body below the front, driver side of the seat. The other is located on the chassis between the seat back supports. To access it, raise the seat and lift up the flap on the access panel.

Design changes take place on an ongoing basis. In order to obtain correct components for the vehicle, the manufacture date code, serial number and vehicle model mustacture date code, serial number and vehicle model must be provided when ordering service parts.

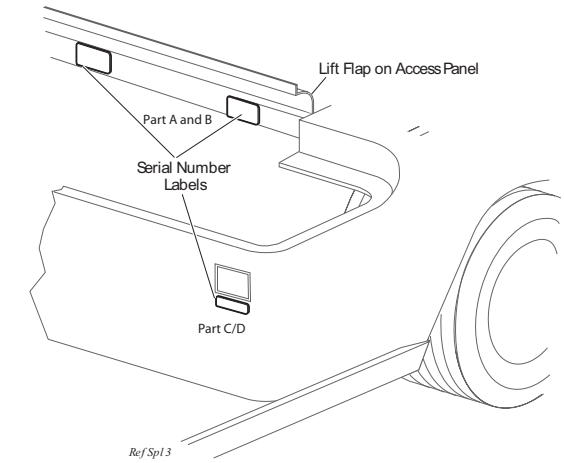

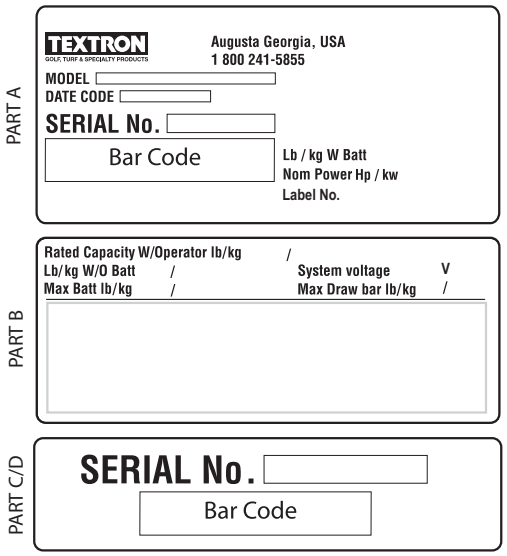

Serial Number Plate and Location

Serial Number & Location

OPERATING PROCEDURES

Read all of this manual to become thoroughly familiar with this vehicle. Pay particular attention to all Notices, Cautions, Warnings, and Dangers.

BEFORE INITIAL USE

NOTICE

Record the four digit key number and store in a safe place. Individual keys can only be replaced if the key number is known. Without a key number, the entire ignition switch will have to be replaced if keys are lost.

⚠ WARNING

4

Read and follow the safety label on the instrument panel. Be sure you understand how to operate the vehicle and its equipment as well as how to use it safely. Maintaining good performance depends to a large extent on the operator.

Improper use of this vehicle could result in severe injury or death. The vehicle is a light duty utility vehicle. It is NOT an all terrain vehicle (ATV).

This vehicle is not a toy and using it while engaging in horseplay is dangerous.

Plan carefully before using the vehicle to go significant distances over questionable terrain. Remember that a one hour drive may take many hours to walk out should you run out of fuel or be stranded by becoming stuck on unsuitable terrain.

Hydrogen gas is generated as a natural part of the lead acid battery charging process. A 4% concentration of hydrogen gas is explosive and could cause severe injury or death. Charging must take place in an area that is adequately ventilated (minimum of 5 air exchanges per hour).

To reduce the chance of battery explosion that could result in severe injury or death, never smoke around or charge batteries in an area that has open flame or electrical equipment that could cause an electrical arc.

Read, understand and follow the SAFETY AND OPERATION label located on the center of the instrument panel above the drink holders.

Be sure you understand the vehicle, its equipment and how to use it safely. Although the vehicle has been designed to provide safe and reliable operation, maintaining good performance depends, to a large extent, on the operator.

Before a new vehicle is put into operation, the items shown in the ***INITIAL SERVICE CHART*** must be performed.

Vehicle battery must be fully charged before initial use.

Check for correct tire inflation. See GENERAL SPECIFICATIONS.

Check for oil or fuel leaks that could have developed in shipment from the factory.

Determine and record braking distance required to stop vehicle for future brake performance tests.

Remove the protective clear plastic, that protect the seat bottom and back rest during shipping, before placing the vehicle in service.

ITEM	SERVICE OPERATION
Battery	Charge Battery
Seats	Remove Protective plastic covering
Brakes	Checkoperation and adjust if necessary
	Checkhydraulic brake uid level
	Establishnew vehicle braking distance
Tires	Checkpressure
FUEL	Fill tank with correct fuel
Engine	Checkoil level (Initial change after 5-8 hr)
Keys	Record key number and store in safe location

Read all of this manual to become thoroughly familiar with this vehicle. Pay particular attention to all Notices, Cautions, Warnings, and Dangers.

OPERATING THE VEHICLE

⚠ CAUTION

Improper use of the vehicle or the lack of proper maintenance may result in damage or decreased performance.

Read and understand the following warnings before attempting to operate the vehicle.

⚠ WARNING

To reduce the possibility of severe injury or death resulting from loss of vehicle control, the following warnings must be observed:

When driving vehicle, consider the terrain, traffic conditions and the environmental factors which effect the terrain and the ability to control the vehicle.

Use extra care and reduced speed when driving on poor surfaces, such as loose dirt, wet grass, gravel, etc.

Stay in designated areas and avoid extremely rough terrain.

Maintain a safe speed when driving down hill. Use service brake to control speed when traveling down an incline. A sudden stop or change of direction may result in loss of control.

Slow down before and during turns. All turns should be made at reduced speed.

Never drive vehicle up, down, or across an incline that exceeds 14 ° (25% grade).

⚠ WARNING

To reduce the possibility of severe injury or death resulting from improper vehicle operation, the following warnings must be observed:

Refer to GENERAL SPECIFICATIONS for seating capacity.

Depressing accelerator pedal will release foot operated park brake and may cause inadvertent vehicle movement. Turn the key to the 'OFF' position whenever the vehicle is parked.

To prevent inadvertent movement when the vehicle is to be left unattended, engage the park brake, move direction selector to forward position, turn key to 'OFF' position and remove key.

Make sure that the direction selector is in correct position before attempting to start the vehicle.

Always bring the vehicle to a complete stop before shifting the direction selector.

Do not take vehicle out of 'gear' while in motion (coast).

Check the area behind the vehicle before operating in reverse.

All occupants must be seated. Keep entire body inside vehicle and hold on while vehicle is in motion.

RUN-IN

Check for oil or fuel leaks that could have developed in shipment from the factory. Avoid full throttle starts and rapid acceleration until the engine has achieved operating temperature.

All engines consume more oil than normal during the first hours of operation. As internal moving parts are run-in, oil consumption should gradually decrease until the rate of consumption stabilizes.

Read all of this manual to become thoroughly familiar with this vehicle. Pay particular attention to all Notices, Cautions, Warnings, and Dangers.

Check the oil level per the Periodic Service Schedule. Add oil if the level on the dipstick indicates that oil is in the add oil range.

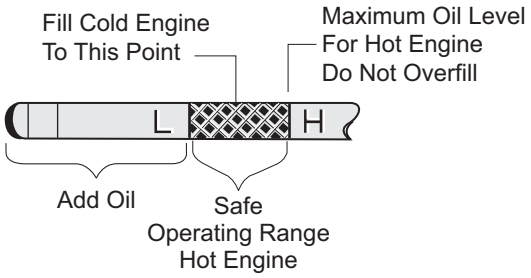

Check Oil Level on DipStick

⚠ CAUTION

Do not overfill engine. Too much oil may cause smoking or allow oil to enter the air filter enclosure.

NOTICE

The oil dipstick/fill cap must be in place before operating the engine. Failure to install the dipstick/fill cap will result in oil becoming contaminated and/or being discharged into the engine compartment.

Oil dipsticks are unique to this model vehicle. Do not interchange oil dipsticks between models.

The oil should be changed in accordance with the Periodic Service Schedule while the engine is warm. See SERVICE AND MAINTENANCE for checking oil level and changing oil procedures.

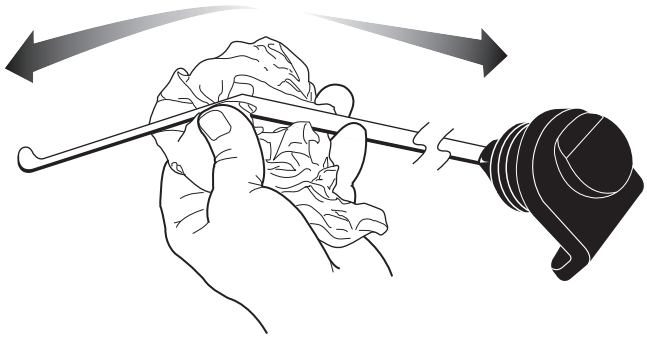

Clean Entire Dipstick

COLD STARTING

Starting a cold engine **may** require use of the choke. Depress the accelerator approximately 1" (2.5 cm) or until the starter just begins to operate. Pull the choke out if required. Accelerate slowly and push the choke in completely when the engine runs smoothly.

⚠ CAUTION

Do not allow the starter to operate continuously for more than 10 seconds. Allow 30 seconds between starting attempts. If the vehicle does not start on the third attempt, turn the key switch off, set the park brake and determine the cause of the problem.

If the vehicle had been running and the engine does not start within 10 seconds, use the choke.

Read all of this manual to become thoroughly familiar with this vehicle. Pay particular attention to all Notices, Cautions, Warnings, and Dangers.

STARTING AND DRIVING

⚠ WARNING

To reduce the possibility of roll-back which could result in severe injury or vehicle damage, do not release service brake until engine has started.

To operate vehicle:

- Apply the service brake, place the key in the key switch and turn it to the 'ON' position.
- Move the direction selector to the direction desired.
- Release the park brake by depressing the service brake pedal until the park brake releases.
- Slowly depress the accelerator pedal to start the engine. Release service brake when engine starts.
- When the accelerator pedal is released, the ignition circuit is de-energized and the engine stops. To stop the vehicle more quickly, depress the **service brake pedal**

NOTICE

When the direction selector is in the reverse position, a warning signal will sound to indicate that the vehicle is ready to run in reverse.

STARTING THE VEHICLE ON A HILL

⚠ WARNING

To reduce the possibility of roll-back which could result in severe injury or vehicle damage, do not release service brake until engine has started.

⚠ CAUTION

Do not hold vehicle on hill by using accelerator and engine. This will cause premature and excessive wear to drive train components.

To reduce the possibility of permanent damage to the drive system, it is important to prevent excessive roll-back when starting the vehicle on a hill.

Place left foot on service brake and release the park brake. Depress accelerator with right foot and release the service brake by lifting left foot.

Starting the Vehicle with Discharged Battery

⚠ WARNING

Do not attempt to 'jump start' a vehicle using another vehicle.

The vehicle is equipped with a starter/generator. When starting the engine, the starter/generator functions as a starter and with the engine running, it functions as a generator. Since the engine stops when the accelerator is released, **do not attempt jump starting**.

With the running times associated with this kind of vehicle, the generator is more than adequate to maintain the battery charge level. The generator is not designed to charge a discharged battery.

If the vehicle is equipped with additional lights and/or a strobe light that is used when the vehicle is not in motion, the starter/generator may not be adequate to maintain battery charge. If the vehicle battery has become discharged, it

must be charged using a 12V charger that is rated at 10 amps or less. Observe all instructions provided by the manufacturer of the charger.

COASTING

⚠ WARNING

To reduce the possibility of severe injury or death from coasting at above recommended speeds, limit speed with service brake.

On steep hills, it is possible for the vehicle to coast at greater than normal speeds encountered on a flat surface. To reduce the possible loss of vehicle control and severe drivetrain damage, speeds should be limited to no more than the maximum governed speed on level ground (see GENERAL SPECIFICATIONS). Limit speed by applying service brake.

FUEL

⚠ WARNING

To reduce the possibility of severe injury or death from improper fuel handling:

Do not smoke near the fuel tank.

Do not refuel near open flame or electrical items which could produce a spark.

Always handle gasoline in a well ventilated area.

Always wear eye protection to protect against splashed fuel and fuel vapors.

Always allow adequate space for the expansion of gasoline. Leave at least 1" (2.5 cm) space below bottom of filler neck.

Inspect fuel cap, tank and other components for leaks or deterioration that could cause a hazardous condition.

The fuel tank is located under the seat on the passenger side of the vehicle. Fill the tank with fresh, clean, automotive grade gasoline. High altitude or heavy use/load applications may benefit from higher octane gasoline.

Do not use gasoline which contains Methanol.

⚠ CAUTION

Some fuels, called oxygenated or reformulated gasoline, are gasoline blended with alcohols or ethers. Excessive amounts of these blends can damage the fuel system or cause performance problems. If any undesirable operating symptoms occur, use gasoline with a lower percentage of alcohol or ether.

Use fresh regular grade unleaded fuel. Ethanol blend fuel upto 10% is permissible.

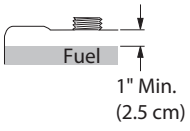

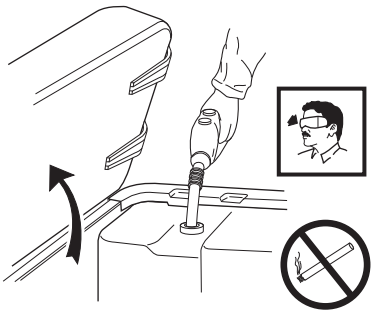

BATTERY

⚠ CAUTION

Excessive use of accessories may drain the battery and leave insufficient reserve to start the vehicle.

The vehicle uses a combination starter/generator to both start the engine and charge the battery. The engine will not idle; therefore, the battery cannot be charged while the vehicle is stopped. Do not operate accessory items (such as lights) excessively while the vehicle is stopped.

The generator is capable of supplying 35 amps; therefore, operation of all accessories could result in the discharge of the battery even though the engine is running and the generator operating. Discharging the battery is known as deep cycling. The battery is not a deep cycle model, but is a starting battery. Multiple deep cycling will result in the premature failure of the battery.

If the vehicle battery has become discharged, it must be charged using a 12 volt charger that is rated at 10 amps or less and in accordance with all instructions provided by the manufacturer of the charger.

SUN TOP AND WINDSHIELD

⚠ WARNING

The sun top does not provide protection from roll over or falling objects.

The windshield does not provide protection from tree limbs or flying objects.

⚠ CAUTION

To prevent damage to the vehicle, do not hold on to sun top struts and stand on body panels.

The sun top and windshield provide some protection from the elements; however, they will not keep the operator and passenger dry in a downpour. This vehicle is not equipped with seat belts and the sun top has not been designed to provide roll over protection. In addition, the sun top does not protect against falling objects nor does the windshield protect against flying objects and tree limbs. Keep arms and legs inside of vehicle while it is moving.

TOWING A TRAILER

The vehicle is equipped with a receiver that can be fitted with a standard 1 7/8" ball. The trailer and its load must not exceed 500 lbs (227 kg) and no more than 50 lbs (23 kg) tongue weight may be attached to the hitch. Remember that the overall capacity of the vehicle, operator, passenger, contents of load bed and accessories must be reduced to compensate for the trailer and load.

The range of motion of the trailer is limited by the ball and hitch. The trailer should not be used on rough trails or over objects such as logs, large rocks, holes, etc.

Never install baskets or extensions using the hitch receivers (front or rear). Such items will change the performance characteristics of vehicle and result in unsafe handling, possible roll over or vehicle damage.

TERRAIN

The vehicle is designed for use on improved roads (but not on public highways). The vehicle may also be used on established trails or open terrain that is free from stumps, large rocks or holes.

The vehicle should not be used to cross water.

DUMP BED

Be careful when loading the vehicle. Secure loads to prevent shifting. Do not overload vehicle. A dump bed warning label is affixed to the inside of the bed on the front panel.

This label must be understood and observed at all times for safe operation of the vehicle. The dump bed is limited to a maximum load of 500 lbs (228 kg). The load must be positioned in the bed as far forward as possible, its center of gravity must not be higher than 5" (12 cm) above the bed floor, and securely fastened down. Failure to follow these instructions could cause personal injury, damage to the vehicle and/or cause the vehicle to tip over. Operate the vehicle with awareness of the load.

Do not drive the vehicle with the dump bed raised or with the tailgate unsupported.

When using the optional electric dump, be sure to avoid backing up to the edge of a drop off, such as a loading dock or ravine. A misjudgment of distance or an unstable surface could result in the vehicle falling backwards.

Always insure that no one is behind or close to the dump bed while the electric dump mechanism is being operated.

⚠ WARNING

Passengers should never be allowed to ride in the dump bed. Severe injury or death could result if they should fall out or the vehicle is involved in an accident or sudden maneuver.

OPTIONAL WINCH

This vehicle may be equipped with an optional winch. Read, understand and follow all of the following information on the operation and use of the winch before attempting to operate it.

Operation of the Winch

The winch can be mounted at the front or rear of the vehicle and moved to accommodate different situations. At the front, it is mounted under the center of the front cowl to a bracket attached to the front axle as shown. At the rear, the winch is mounted upside down in the hitch receiver.

NOTICE

If mounting winch at rear of vehicle, the winch must be mounted upside down.

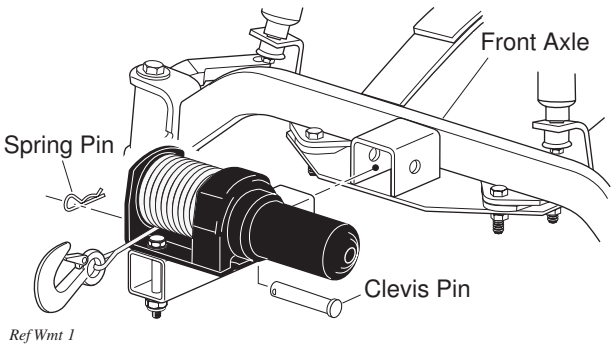

Winch shown mounted at front of vehicle

Before moving the winch, unplug the winch connector from the wire harness. To move the winch from one end of the vehicle to the other, remove the spring pin, pull out the clevis pin and remove the winch mount tube from the receiver. Move to opposite end of vehicle and install by inserting clevis pin and securing with spring pin. Plug the winch connector into wire harness.

The winch remote control plugs into the receptacle on the driver side of the seat support.

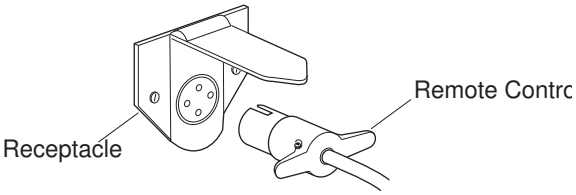

To unwind the cable, locate the clutch knob on the winch. Pull out knob and rotate 90° to lock out. Using handsaver bar, pull cable

from winch drum. Leave at least five turns of cable on drum. Re-engage drum by turning clutch knob 90°, returning it to original position.

To wind cable, use handsaver bar to keep tension on the cable while activating remote. When winding cable, make sure the cable winds tightly and evenly onto the drum leaving no gaps that could cause premature wear to the cable. When using winch under a load, operate the remote control from as far to the side of the vehicle as possible. Do not operate winch while sitting in passenger seat. Read the following section (Winch Applications) before attempting to operate winch.

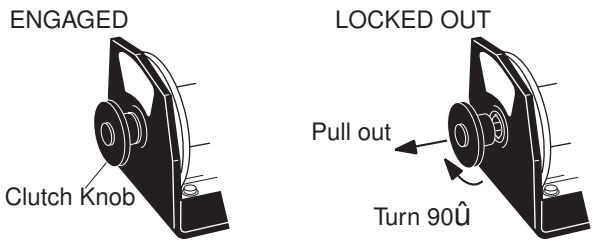

Winch Clutch Knob

Winch Application

The optional winch may be used for a number of purposes, including pulling the vehicle if it loses traction on unsuitable terrain.

⚠ WARNING

Improper use of the winch could result in a number of conditions that could cause severe injury or death to operator, occupants of vehicle or bystander.

It is impossible to predict all conditions that the winch could be used, therefore the following warnings should not be considered as complete. Before operating the winch, consider the possible dangers and take precautions to protect yourself, your passenger and any bystanders.

⚠ WARNING

To prevent severe injury or death to operator, occupants or bystanders, select the object to which the cable is attached with the following considerations:

Make sure the object cannot be pulled over or otherwise damaged.

The object the winch cable is attached to could fall on the vehicle and it's occupants.

If attaching the winch to a dead tree, a section could fall.

When pulling vehicle with winch, pull straight only. Do not permit the cable to contact the side of the drum.

⚠ WARNING

Do not pull vehicle at an angle. If the vehicle is pulled at an angle, it could turn over causing severe injury or death to anyone in the area. The winch cable could also become overstressed and break causing severe injury or death to anyone struck by the cable.

The rear drive axle is equipped with a manually operated locking differential. With the differential unlocked, if one drive wheel looses traction, all available power is transferred to that wheel until it regains traction. In normal driving this is not a problem. However, if the vehicle becomes 'hung up' on an object, the vehicle will stop. With the differential locked, power is distributed to both drive wheels at all times. If both drive wheels lose traction as a result of the vehicle becoming 'hung up' on an object, the vehicle will stop. If the vehicle cannot be pushed off the obstruction, it will have to be pulled off using the winch.

Depending on the location of the obstruction, the vehicle may need to be pulled either forward or backward.

The winch may be installed in either the front or rear receiver and held in place with the locking pin provided.

⚠ WARNING

To prevent severe injury or death, read and understand the following before attempting to use the winch:

The winch is not intended to be used in any hoisting operation.

The rolling load capacity of the winch decreases with the steepness of the slope.

The winch is designed for intermittent duty only.

The electric motor should not be allowed to become excessively hot. If the motor becomes uncomfortably hot to the touch, stop winching and allow the motor to cool.

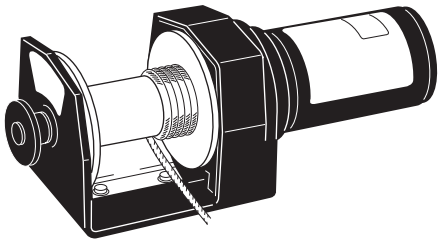

Always wear thick leather gloves when handling the wire cable.

Replace frayed wire cable with a direct factory replacement only.

Never operate the winch with less than five (5) full turns of cable around the drum.

If the winch motor stalls from overloading, do not continue to activate the winch remote control. The wire cable may become overstressed.

Do not attempt to pull loads exceeding 1500 lbs. (680 kg).

To pull out the cable, the free spool clutch knob must be used. Pull out and rotate the knob. If the cable is under any load the clutch may not release easily. Jog out some of the cable to release the tension and operate clutch. Pull out the desired amount of cable and secure. Engage the drum by rotating the knob until it snaps in place. Never operate the winch unless the clutch is engaged.

Have all persons and pets leave the area while operating winch. Never allow anyone to remain in the vehicle.

To prevent damage to the wire cable, never hook the cable to itself.Always use a nylon sling.

Stay clear of the winch, the cable and the cable hook. Place a heavy cloth, jacket or blanket over the cable to act as a damper should the cable break when operating the winch.

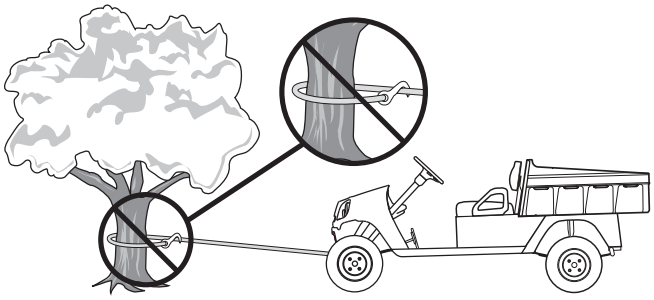

Do Not Hook Cable to Itself

Remember that the winch operation will drain the battery and may leave insufficient power to start the vehicle.

When operating the winch, keep the entire area in view.

Read all of this manual to become thoroughly familiar with this vehicle. Pay particular attention to all Notices, Cautions, Warnings, and Dangers.

Never release the free spool clutch while the cable is under load.

Never work around the winch drum or the winch cable while it is under tension.

Unplug the winch switch before working on the winch drum in order to prevent inadvertent operation.

When operating winch, take up slack slowly. Stop winch before cable becomes tight and inspect all winching connections. Check winch attachment, hook attachment, nylon sling (if required) and load attachment.

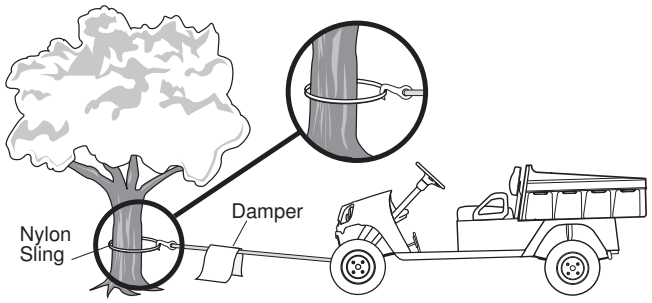

Use a Nylon Sling and Install a Damper when Winching

Do not pull at an angle. This will cause the wire cable to pile up on one end of the winch. This may jam the winch causing damage to the cable and/or the winch. Pulling the vehicle at an angle can cause damage to the front suspension and may cause the vehicle to overturn. When pulling vehicle, pull straight only.

If the vehicle is being used as an anchor to winch a load, it should have the parking brake set and chocks installed on all wheels.

Never use the winch to lift people or other overhead loads.

Do not use the winch to secure loads. Use a tie down designed for the job.

Do not apply shock loads to the winch.

Do not attempt to modify or weld the winch.

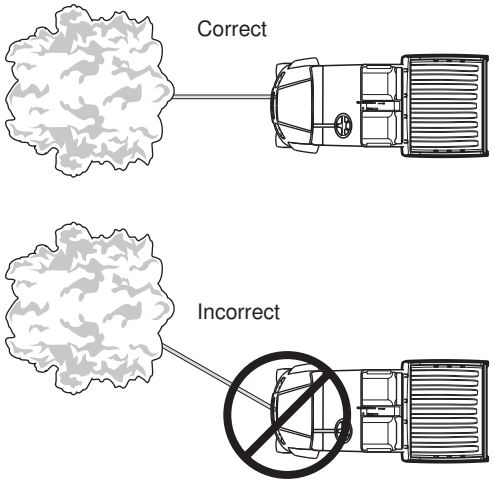

Do Not Pull at Angle

Notes:

Read all of this manual to become thoroughly familiar with this vehicle. Pay particular attention to all Notices, Cautions, Warnings, and Dangers.

TITLE **PAGE NO.**

VEHICLE CLEANING AND CARE 5-3

Vehicle Cleaning 5-3

COMMON SENSE OPERATION 5-4

ENVIRONMENTAL CONCERNS 5-4

REPAIR 5-5

Lifting the Vehicle 5-5

WHEELS AND TIRES 5-6

Tire Repair 5-6

Wheel Installation 5-7

LIGHT BULB REPLACEMENT 5-8

FUSE REPLACEMENT 5-8

VEHICLE WITH DISCHARGED BATTERY 5-8

TRANSPORTING VEHICLE 5-9

Towing 5-9

Neutral Lock 5-9

Hauling 5-9

SERVICE AND MAINTENANCE 5-10

ROUTINE MAINTENANCE 5-11

Tire Inspection 5-11

Rear Axle 5-11

FOUR CYCLE ENGINE 5-11

Engine Specifications 5-11

Engine Description 5-11

CHECKING THE OIL LEVEL 5-11

Changing the Oil 5-12

STARTER GENERATOR BELT TENSION 5-15

Adjusting the Belt 5-15

BATTERY CLEANING 5-16

BRAKES 5-17

PERIODIC BRAKE TEST FOR MECHANICAL BRAKES 5-17

AIR INTAKE AND COOLING FINS 5-18

REAR AXLE 5-18

Checking the Lubricant Level 5-18

AIR CLEANER INSPECTION AND REPLACEMENT 5-19

MAINTENANCE

Read all of this manual to become thoroughly familiar with this vehicle. Pay particular attention to all Notices, Cautions, Warnings, and Dangers.

Cleaning the Air Filter Element 5-19

Pre Cleaner Service 5-20

Cartridge Service 5-20

LUBRICATION 5-20

SPARK PLUGS 5-21

PROLONGED STORAGE 5-21

CAPACITIES AND REPLACEMENT PARTS 5-22

PERIODIC SERVICE SCHEDULE 5-23

HARDWARE 5-25

VEHICLE CLEANING AND CARE

Vehicle Cleaning

⚠ WARNING

To reduce the possibility of severe injury or vehicle damage, read and understand all instructions supplied by manufacturer of pressure washer.

⚠ CAUTION

When pressure washing exterior of vehicle, do not use pressure in excess of 700 psi. To reduce the possibility of cosmetic damage, do not use any abrasive or reactive solvents to clean plastic parts.

It is important that proper techniques and cleaning materials be used. Using excessive water pressure may cause severe injury to operator or bystander, damage to seals, plastics, seat material, body finish or electrical system. Do not use pressure in excess of 700 psi to wash exterior of vehicle.

Clean windshield with lots of water and a clean cloth. Minor scratches may be removed using a commercial plastic polish or Plexus® plastic cleaner available from the service parts department.

Normal cleaning of vinyl seats and plastic or rubber trim requires the use of a mild soap solution applied with a sponge or soft brush and wipe with a damp cloth.

Removal of oil, tar, asphalt, shoe polish, etc. will require the use of a commercially available vinyl/rubber cleaner.

The painted surfaces of the vehicle provide attractive appearance and durable protection. Frequent washing with lukewarm or cold water and mild detergent is required to preserve the painted surfaces.

Occasional cleaning and waxing with non-abrasive products designed for ‘clear coat’ automotive finishes will enhance the appearance and durability of the painted surfaces.

Corrosive materials used as fertilizers or for dust control can collect on the underbody of the vehicle. These materials will cause corrosion of underbody parts unless flushed occasionally with plain water. Thoroughly clean any areas where mud or other debris can collect. Sediment packed in closed areas should be loosened to ease it’s removal, taking care not to chip or otherwise damage paint.

Read all of this manual to become thoroughly familiar with this vehicle. Pay particular attention to all Notices, Cautions, Warnings, and Dangers.

COMMON SENSE OPERATION

⚠ WARNING

To prevent severe injury or death, observe the following:

Never transport loaded firearms on or in vehicle

Check that firearms are unloaded with the safety engaged and are properly secured with muzzle pointing in a safe direction before operating vehicle.

Be aware of other firearms in proximity to operator and passengers.

This vehicle is not a toy. If not operated properly and responsibly, it can cause severe injury or death to the operator, passengers or bystanders. All operators should possess a valid driver's license. Children should not be permitted to operate the vehicle. Children may not have the skill, judgement or strength to operate this or similar vehicles.

Alcohol, drugs and many over the counter medications reduce the ability of the driver to operate the vehicle safely. Always review side effects of any medication with a doctor or pharmacist before operating vehicle.

Protective clothing and an approved motorcycle helmet are recommended for operator and passengers when operating vehicle in rough or densely wooded terrain.

When driving at full speed on a dirt road, loose surfaces or wet grass, vehicle stopping distance will increase. If the vehicle is fully loaded, it will take longer to stop than with no load. When operating vehicle in wet weather conditions, remember that the brakes may need to be **lightly** applied in order to provide enough friction to dry the brake unit. If wet, the brakes will lose much of their effect.

Slow down when in unfamiliar terrain. Slow down when cresting a hill in an area that you are unfamiliar with.

Some hills are too steep to climb. If you attempt to climb a hill that is too steep or if you are unable to achieve adequate traction, **do not attempt to turn around on the hill. Slowly back straight down the hill using the service brake to control speed.**

ENVIRONMENTAL CONCERNS

⚠ WARNING

As a responsible user, practice respect for all wildlife and their habitat. Respect private property and comply with all local laws and regulations governing the use of light duty utility vehicles. To prevent severe injury or death while driving, be aware of the following:

Environmental hazards such as steep slopes, overhanging limbs, etc.

Danger of fire when vehicle is operated over dry combustible organic material.

When driving, be aware of environmental hazards such as steep slopes, overhanging limbs, etc. Be aware of the danger of fire when the gasoline powered vehicle is operated over dry combustible organic material.

Read all of this manual to become thoroughly familiar with this vehicle. Pay particular attention to all Notices, Cautions, Warnings, and Dangers.

REPAIR

Some servicing operations may require the front wheels, the rear wheels, or the entire vehicle to be raised.

⚠ WARNING

To reduce the possibility of severe injury or death from a vehicle falling from a jack:

Be sure the vehicle is on a firm and level surface.

Never get under a vehicle while it is supported by a jack.

Use jack stands and test the stability of the vehicle on the stands.

Always place chocks in front and behind the wheels not being raised.

Use extreme care since the vehicle is extremely unstable during the lifting process.

⚠ CAUTION

When lifting the vehicle, position the jacks and jack stands at the areas indicated only.

Lifting The Vehicle

Tool List	Qty.	Tool List	Qty.
Floor jack	1	Jack stands	4
Wheel Chocks	4		

Remove payload from vehicle before lifting. No person(s) should be in or on the vehicle while lifting.

To raise the entire vehicle, install chocks in front and behind each front wheel. Center the jack under the rear frame crossmember. Raise the vehicle enough to place a jack stand under the outer ends of the rear axle.

Lower the jack and test the stability of the vehicle on the two jack stands.

Place the jack at the center of the front axle. Raise the vehicle enough to place jack stands under the frame crossmember as indicated.

Lower the jack and test the stability of the vehicle on all four jack stands.

If only the front or rear of the vehicle is to be raised, place the chocks in front and behind each wheel not being raised to stabilize the vehicle.

Lower the vehicle by reversing the lifting sequence.

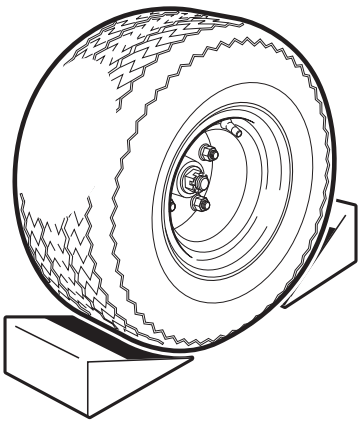

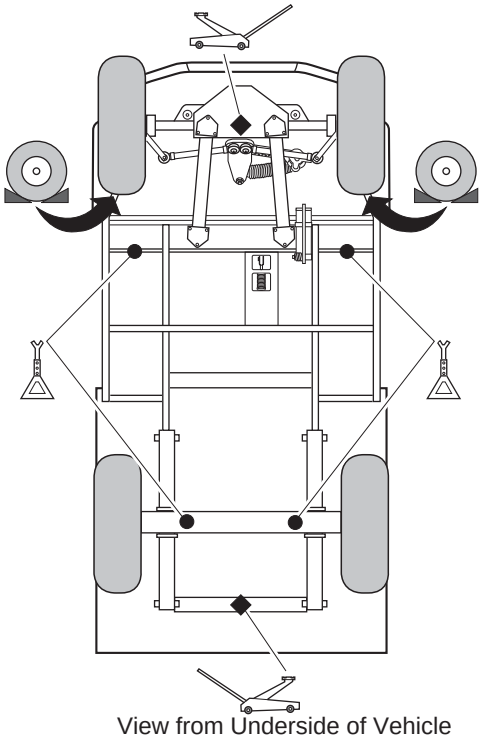

View from Underside of Vehicle

WHEELS AND TIRES

⚠ WARNING

A tire explosion can cause severe injury or death. Never exceed the inflation pressure rating on the tire sidewall.

To reduce the possibility of tire explosion, pressurize tire with small amounts of air applied intermittently to seat beads. Due to the low volume of the small tires, overinflation can occur in seconds. Never exceed the tire manufacturer's recommendation when seating a bead. Protect face and eyes from escaping air when removing a valve core.

To reduce the possibility of severe injury caused by a broken socket when removing wheels, use only sockets designed for impact wrench use.

DO NOT use low inflation tires on any E-Z-GO vehicle. DO NOT use any tire which has a recommended inflation pressure less than the inflation pressure recommended in the owner's guide.

Use caution when inflating tires. Overinflation could cause the tire to separate from the wheel or cause the tire to explode, either of which could cause severe injury.

Tire Repair

Tool List	Qty.	Tool List	Qty.
Lug wrench, 3/4"	1	Impact socket, 3/4"	1
Impact wrench	1	Torque wrench, ft. lbs	1

Use caution when inflating tires. Due to the low volume of the small tires, overinflation can occur in seconds. Overinflation could cause the tire to separate from the wheel or cause the tire to explode.

Tire inflation should be determined by the condition of the terrain. See GENERAL SPECIFICATIONS section for recommended tire inflation pressure. For outdoor applications with major use on grassy areas, the following should be considered. On hard turf, it is desirable to have a **slightly** higher inflation pressure. On very soft turf, a lower pressure reduces the possibility of tires cutting into the turf. For vehicles being used on paved or hard surfaces, tire inflation pressure should be in the higher allowable range, but under no condition should inflation pressure be higher than recommended on tire sidewall. **All four tires** should have the same pressure for optimum handling characteristics. Be sure to install the valve stem dust cap after checking or inflating.

The vehicle is fitted with low pressure tubeless tires mounted on one piece rims; therefore, the most cost effective way to repair a puncture in the tread is to use a commercial tire plug.

NOTICE

Tire plug tools and plugs are available at most automotive parts outlets and have the advantage of not requiring the tire be removed from the wheel.

If the tire is flat, remove the wheel and inflate the tire to the maximum recommended pressure for the tire. Immerse the tire in water to locate the leak and mark with chalk. Insert tire plug in accordance with manufacturer's instructions.

⚠ WARNING

To reduce the possibility of severe injury, be sure the mounting/demounting machine is anchored to floor. Wear OSHA approved safety equipment when mounting/demounting tires.

If the tire is to be removed or mounted, the tire changing machine manufacturer's recommendations must be followed in order to reduce possibility of severe injury.

Wheel Installation

⚠ CAUTION

To reduce the possibility of component damage, do not tighten lug nuts to more than 85 ft. lbs. (115 Nm) torque.

NOTICE

It is important to follow the 'cross sequence' pattern when installing lug nuts. This will assure even seating of the wheel against the hub.

With the valve stem to the outside, mount the wheel onto the hub with lug nuts. Finger tighten the lug nuts (1) in a 'cross sequence' pattern. Tighten the lug nuts to 50 to 85 ft. lbs. (68 to 115 Nm) torque in 20 ft. lbs. (27 Nm) increments following the 'cross sequence' pattern.

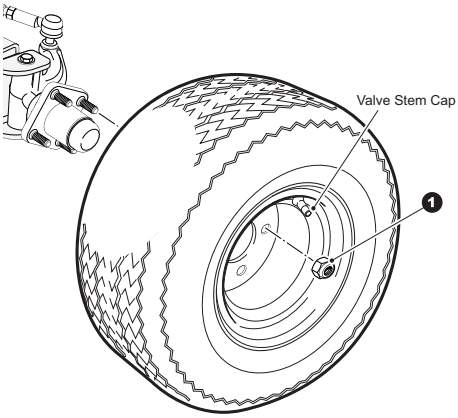

Tire style may vary

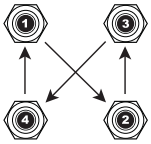

Cross Sequence

Unidirectional Tires

Some vehicles may be fitted with unidirectional tires. These tires may be identified by a directional arrow on the sidewall. Be sure to position the wheel on hub correctly with arrow indicating direction of rotation when moving forward.

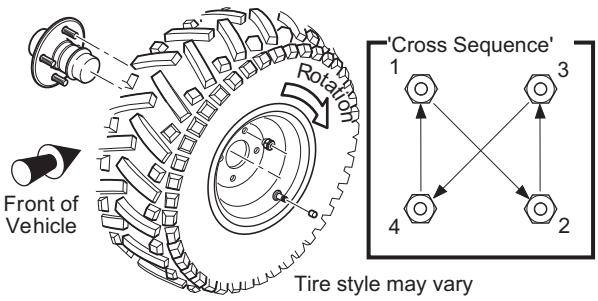

Tire style may vary

LIGHT BULB REPLACEMENT

⚠ CAUTION

To reduce the possibility of premature bulb failure, do not touch new bulbs with bare fingers. Use clean, dry tissue or paper towel to handle the glass portion of the bulb.

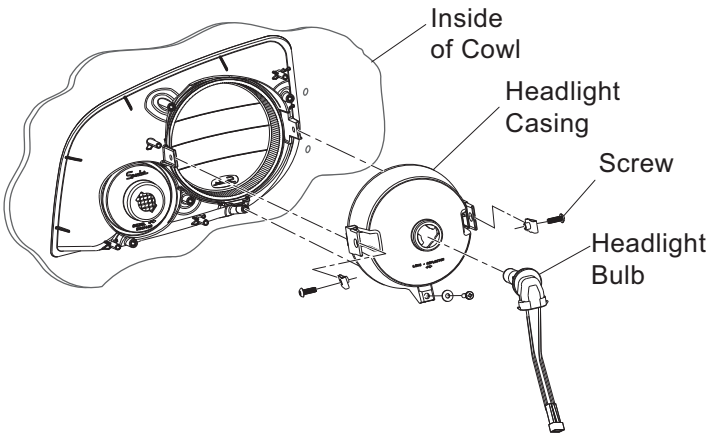

For vehicles equipped with lights mounted in the cowl, locate bulb socket on backside of light and turn bulb socket a quarter turn counterclockwise to unlock and pull out bulb and socket. Insert new bulb and rotate socket a quarter turn clockwise to secure.

Similarly replace the turn signal light bulb, locate bulb socket on backside of light bar and turn bulb socket a quarter turn counterclockwise to unlock and pull out bulb and socket. Insert new bulb and rotate socket a quarter turn clockwise to secure.

To replace the tail and brake light bulb, roll the rubber bezel from around the edge of the taillight and remove lens. Install replacement bulb and replace lens.

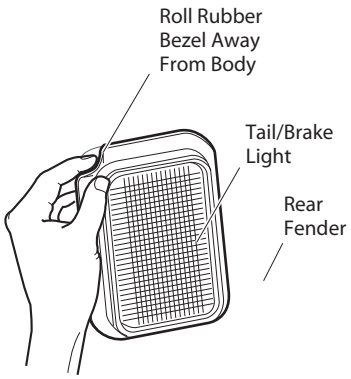

FUSE REPLACEMENT

To replace fuses, locate the fuse block under the driver side seat. Pull out old fuse and replace with a new automotive type fuse. Headlight and taillight bulbs and fuses are available from a local Distributor, an authorized Branch or the Service Parts Department.

VEHICLE WITH A DISCHARGED BATTERY

⚠ WARNING

To reduce the possibility of severe injury or death from inadvertent motion, do not attempt to 'jump start' a vehicle.

The vehicle is equipped with a starter/generator and does not idle. When starting the engine, the starter/generator functions as a starter and with the engine running, it functions as a generator.

With the short running times associated with this kind of vehicle, the generator is more than adequate to maintain the battery charge level. The generator is not designed to charge a discharged battery.

When engine starts, the clutches engage and cause vehicle to move making 'jump starting' both dangerous and impractical.

If the vehicle battery has become discharged, it must be charged using a 12 volt charger that is rated at 10 amps or less. Read and understand all instructions provided by the manufacturer of the charger.

Read all of this manual to become thoroughly familiar with this vehicle. Pay particular attention to all Notices, Cautions, Warnings, and Dangers.

TRANSPORTING VEHICLE

TOWING

⚠ WARNING

This vehicle is not designed to be towed

It is recommended that the vehicle be moved by placing the entire vehicle on a trailer, flatbed truck or other suitable transport.

NEUTRAL LOCK

To prevent the driven clutch from turning the rear wheels during service operations, a lock is located under the passenger side of the console panel. To operate, turn the key switch to 'OFF' and raise the passenger seat. Place the direction selector in the 'F' position. Reach under the passengers side of console panel and rotate the lock lever clockwise until it snaps into the slot in the direction selector bracket as shown. Next, pull the direction selector handle to the rear until it locks in place in the position. When in this position, the direction selector remains locked in the position. To activate the direction selector, pull the lock lever out of the slot and rotate counter-clockwise until it snaps into the detent position in the direction selector bracket.

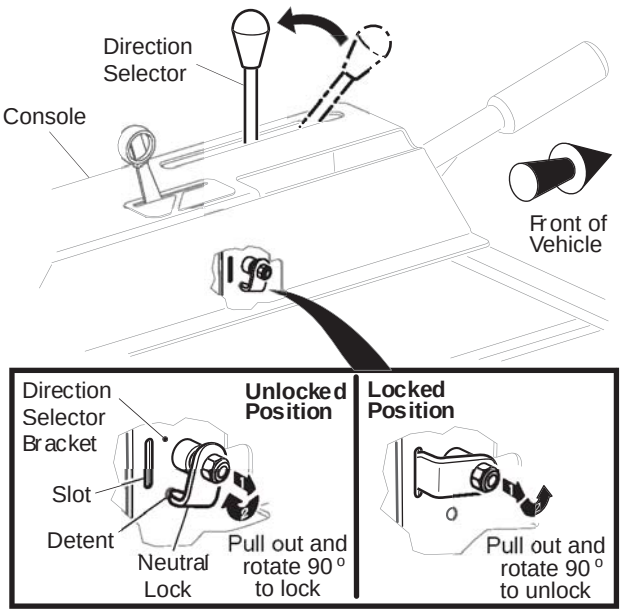

Neutral Lock

Hauling

⚠ WARNING

To reduce the possibility of severe injury or death while transporting the vehicle:

Secure the vehicle and contents.

Never ride on the vehicle being transported.

Always remove the windshield before transporting.

If the vehicle is to be transported at highway speeds, the sun top must be removed and the seat bottom secured. When transporting vehicle below highway speeds, check for tightness of hardware and cracks in sun top at mounting points. Always remove windshield when transporting. Always check that the vehicle and contents are adequately secured before transporting. The rated capacity of the trailer or truck must exceed the weight of the vehicle (see GENERAL SPECIFICATIONS for vehicle weight) and load plus 1000 lbs. (454 kg). Secure the vehicle using ratchet tie downs.

SERVICE AND MAINTENANCE

⚠ WARNING

To reduce the possibility of severe injury or death from improper servicing techniques:

DO NOT attempt any type of servicing operations before reading all notes, cautions and warnings in this manual.

Any servicing requiring adjustments to be made to the powertrain while the motor is running must be made with both drive wheels raised and vehicle properly supported on jack stands.

To reduce the possibility of motor damage, never operate vehicle at full throttle for more than 4 - 5 seconds while vehicle is in a 'no load' condition.

Reduce the possibility of accidental starting by disconnecting battery at negative terminal before servicing.

Wear eye protection when working on the vehicle. Use extra care when working around batteries, or using solvents or compressed air.

To reduce the possibility of causing an electrical arc, which could result in a battery explosion, turn off all electrical loads from the battery before removing battery wires.

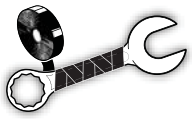

Wrap wrenches with vinyl tape to reduce the possibility of a dropped wrench 'shorting out' a battery, which could result in an explosion.

The electrolyte in a battery is an acid solution which can cause severe burns to the skin and eyes. Treat all electrolyte spills to the body and eyes with extended flushing with clear water. Contact a physician immediately.

Any electrolyte spills should be neutralized with a solution of 2 teaspoons (10 ml) sodium bicarbonate (baking soda) dissolved in 1 quart (1 liters) of water and flushed with water.

Aerosol containers of battery terminal protectant must be used with extreme care. Insulate metal container to reduce the possibility of can contacting battery terminals which could result in an explosion.

It is in the best interest of both vehicle owner and service technician to carefully follow the procedures recommended in this manual. Preventative maintenance, applied at recommended intervals, is the best guarantee for keeping the vehicle both dependable and economical.

This vehicle will give years of satisfactory service, providing it receives regular maintenance. Refer to the Periodic Service Schedule for appropriate service intervals.

ROUTINE MAINTENANCE

⚠ CAUTION

To prolong vehicle life, some maintenance items must be serviced more frequently on vehicles used under severe driving conditions such as extreme temperatures, extreme dust/debris conditions, or frequent use with maximum load.

To access the powertrain for routine maintenance, lift or remove the seat and remove the rear access panel. For major repair, refer to the appropriate Technician's Repair and Service Manual.

Some service procedures may require the vehicle to be lifted. Refer to LIFTING THE VEHICLE for proper lifting procedure and safety information.

Tire Inspection

Tire condition should be inspected per the Periodic Service Schedule. Inflation pressures should be checked when the tires are cool. Be sure to install the valve dust cap after checking or inflating.

Rear Axle

The only maintenance required for the first five years is the periodic inspection of the rear axle for lubricant leakage. Unless leakage is evident, the lubricant need only be replaced after five years. Refer to the Service and Repair Manual for the fluid replacement procedure.

FOUR CYCLE ENGINE

Engine Specifications

Engine model	FJ400D
Type	Four cycle, OHV
Number of cylinders	1
Displacement	401 cc
Rated horsepower	13 hp
Spark plug type	NGK BPR2ES
Spark plug gap	.028" - .031" (.70 - .80 mm)
Cooling	Forced air cooled
Oil Filter	Cartridge type full flow filter
Oil Pump	Positive displacement pump

Engine Description

The engine is an air cooled, 4-stroke, OHV, single cylinder gasoline engine. It incorporates a pressure fed lubrication positive displacement oil pump with a cartridge type full flow oil filter and a counter rotating balance shaft.

CHECKING THE OIL LEVEL

⚠ CAUTION

Do not overfill engine. Too much oil may cause engine to smoke or cause spark plug fouling.

Do not overfill engine. Too much oil may cause smoking or allow oil to enter the air filter enclosure.

The oil should be checked with the engine warm. The vehicle should be on a level surface with the parking (PARK) brake engaged. Allow adequate time for oil to drain into the crankcase before checking.

Remove the dipstick and wipe off the entire area with a lint free cloth.

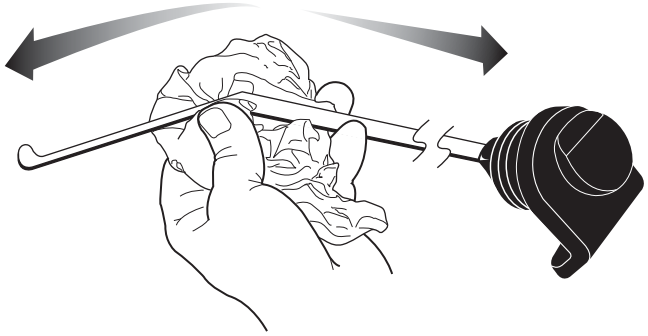

Insert the dipstick **fully** into the dipstick hole and remove. Examine the level of the oil on the dipstick.

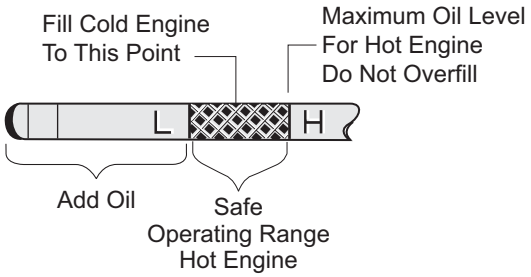

The engine can be operated safely as long as oil is within the safe operating range as indicated on the dip stick. **Do not operate vehicle if oil level is below the safe area indicated on the dipstick.**

Oil should be added to bring the level into the safe operating range. Remember that oil expands as it gets hot, **Do not overfill**. Check that the oil cap is firmly in place.

NOTICE

When adding oil between oil changes, do not mix brands and viscosity grades of oil

The oil dipstick/fill cap must be in place before operating the engine. Failure to install the dipstick/fill cap will result in oil becoming contaminated and/or oil being discharged into the engine compartment.

Changing the Oil

Tool List	**Qty.**
Socket, 3/8" drive	1
Ratchet, 3/8" drive	1
Extension, 3/8" drive, 8"	1
Oil drain pan	1
Wrench, 3/4"	1

For maximum performance and longevity, the engine oil should be replaced after the first 8 hours of operation. After the initial oil change, it should be changed every 125 hours of operation or semi-annually, whichever comes first.

The selection of oil is dependent upon the service that the vehicle will perform. Most vehicles require 10W-30 oil, whereas vehicles used at capacity or near capacity load applications will utilize 10W-40 oil after a break-in period of 100 hours.

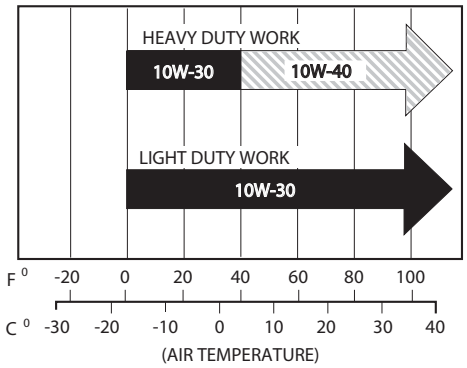

NOTICE

If vehicle is to be stored over winter months, it can be stored with old oil left in engine. The oil should be changed as part of spring maintenance. This will remove any moisture that has accumulated during storage.

⚠ WARNING

Be aware that engine fluids may be hot and contact to the skin may cause severe burns. Wear rubber gloves to protect skin from exposure to the old oil and degreaser.

The oil should be changed with engine warm. Park vehicle on a level surface, engage parking brake and remove key. Place a drain pan under engine. Wipe top of the engine clean with a cloth. Remove the oil fill cap.

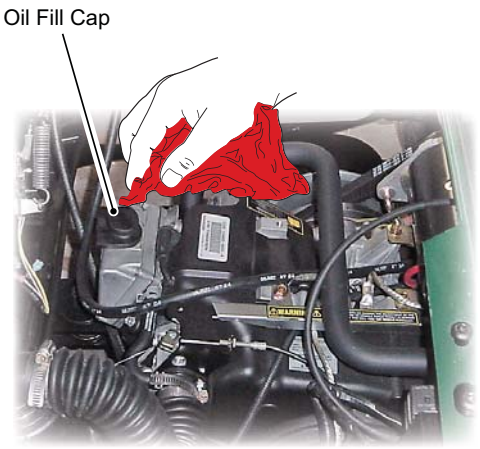

Clean the area around filter. Using a filter wrench, strap wrench or other suitable wrench, remove the filter (B) from the engine and allow the oil to drain. The 'O' rings may remain on engine (A) or filter (B)

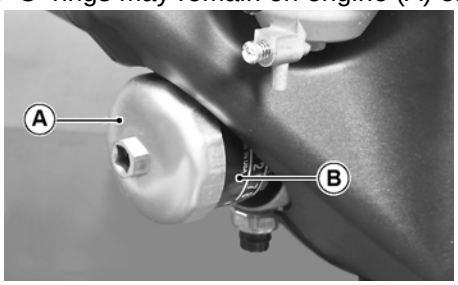

Inspect the filter. Make sure the 'O' ring is not left on the engine surface.

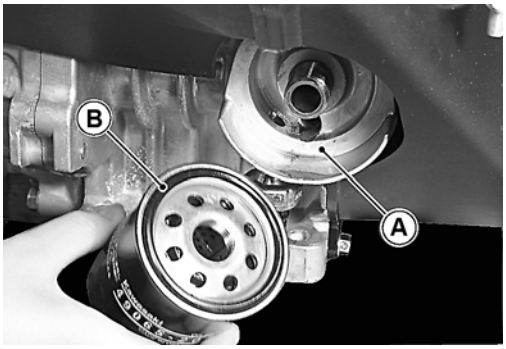

⚠ WARNING

Be careful of hot oil when drained. It may be hot enough to burn you severely

Drain the oil by removing the drain plug found at the rear of the engine base. Remove using a 3/4" wrench. At the first oil change, **small** metal chips and lint may be found. This is normal, resulting from the break-in period. Inspect the filter at every oil change. The presence of large metal chips could indicate possible damage to the engine.

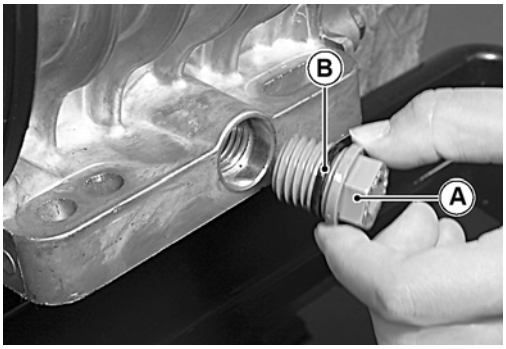

Wipe the area around the drain plug mount with a lint free cloth and inspect the drain plug (A) for damage; replace if necessary. Replace the "O"-ring (B) with a new one and tighten to 61 in. lbs. (7.0 Nm) torque. Apply engine oil to the oil filter seal and install oil filter onto the engine until the seal contacts mounting surface of the engine. Then turn the filter 2/3 to 3/4 rotations by HAND(S). Pour in the specified type and amount of oil See "Capacity and Replacement Parts" chart on page 55.

Oil capacity is 1 1/3 quarts (1.3 liters). Add slightly less than 1 1/3 quarts (1.3 liters) to allow for possible residual oil left in engine. The oil must be high quality oil that meets or exceeds API SF, SG, CC standards. Check oil level on dipstick. Oil should be slightly below 'H' to allow for expansion. If necessary, continue to add oil slowly and allow time for oil to flow down into engine. Check oil level on dipstick. **Do not overfill.**

⚠ CAUTION

Do not overfill engine. Too much oil may cause smoking or allow oil to enter the air filter enclosure.

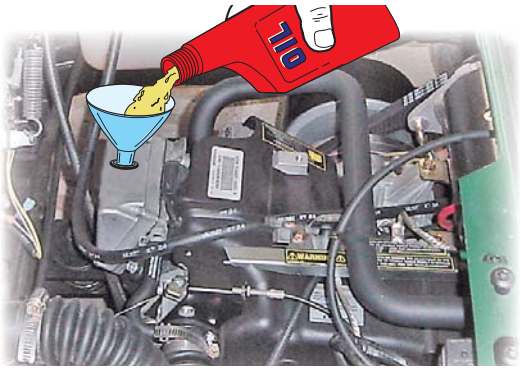

NOTICE

Both the oil dipstick and fill cap must be in place before operating the engine. Failure to install the dipstick and fill cap will result in oil being discharged into the engine compartment

As a final check, check the oil level again with the vehicle on level ground. Like all liquids, oil increases in volume when warm. The full 'H' mark on the dipstick is calibrated for an engine at operating temperature. When the engine is cold, the oil will be below the full mark. The engine can be operated safely as long as the oil is within the safe operating range as indicated on the dipstick. **Do not operate vehicle if oil level is below the safe area indicated on the dipstick.**

STARTER/GENERATOR BELT TENSION

Tool List	**Qty.**
Belt tension gauge	1
Wrench, 3/4"	1
Wrench, 9/16"	2
Ratchet, 3/8" drive	1
Socket, 3/4", 3/8" drive	1

The starter/generator belt tension should be checked after the first 15 - 20 hours and set to 75 - 80 lbs. (34 - 36 kg)

NOTICE

A loose belt can cause audible vibration and squeal.

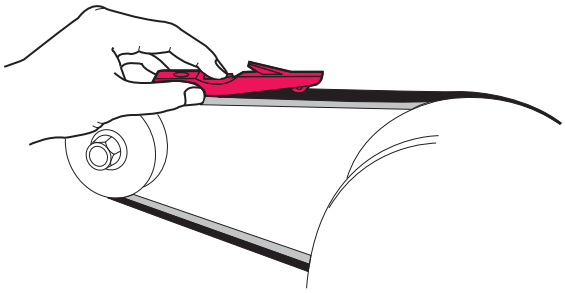

Tighten a **new** starter/generator belt to 90 - 110 lbs. (41-50 kg) tension when a gauge is applied half way between the two pulleys.

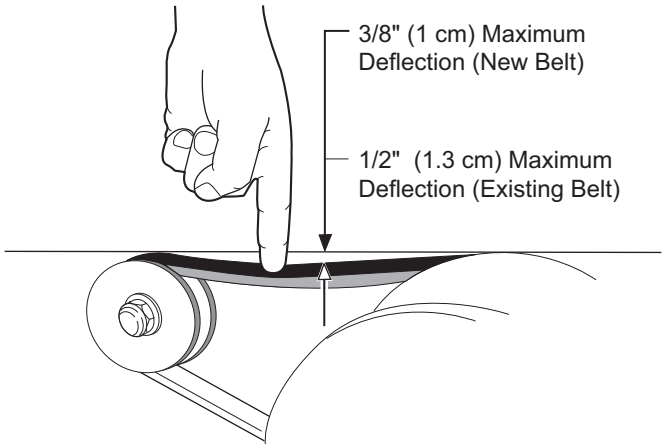

A **new** belt may be checked manually. A maximum deflection of 3/8" (10 mm) is acceptable. Tighten an **existing** belt to 75 - 80 lbs. (34 - 36 kg) tension using the same technique and inspect for cracking or wear. A maximum deflection of 1/2" (13 mm) is acceptable.

Adjusting The Belt

Loosen the starter/generator pivot bolt. While holding the lower adjusting nut with a wrench, loosen the upper jam nut with another wrench. Move the lower nut up or down the adjustment bolt until proper belt tension is achieved. Hold the lower nut in place and tighten the upper jam nut against it.

Tighten the starter/generator pivot bolt.

BATTERY CLEANING

⚠ CAUTION

To reduce the possibility of damage to vehicle or floor, neutralise acid before rinsing battery.

To reduce the possibility of damage to electrical components while cleaning, do not use a pressure washer.

Cleaning should take place per the Periodic Service Schedule (Ref. Periodic Service Schedule).

When cleaning the outside of the battery and terminals, first spray with a solution of sodium bicarbonate (baking soda) and water to neutralize any acid deposits before rinsing with clear water.

Use of a water hose without first Neutralizing any acid, will move acid from the top of the battery to another area of the vehicle or storage facility where it will attack the metal structure or the concrete/asphalt floor. Additionally, a residue will be left on the battery which is conductive and will contribute to the discharge of the battery.

⚠ WARNING

To reduce the possibility of battery explosion that could result in severe injury or death, do not use metallic spray wand to clean battery and keep all smoking materials, open flame or sparks away from the battery.

The correct cleaning technique is to spray the top and sides of the battery with a solution of sodium bicarbonate (baking soda) and water. This solution is best applied with a garden type sprayer equipped with a **plastic spray bottle**. The solution should consist of 2 teaspoons (10 ml) of sodium bicarbonate (baking soda) and 1 quart (1 liter) clear water as shown. In addition to the battery, special attention should be paid to metal components adjacent to the battery which should also be sprayed with the sodium bicarbonate (baking soda) solution.

Allow the solution to sit for at least three minutes; use a soft bristle brush or cloth to wipe the tops of the battery to remove any residue that could contribute to the self discharge of the battery. Rinse the entire area with low pressure clear water. Do not use a pressure washer.

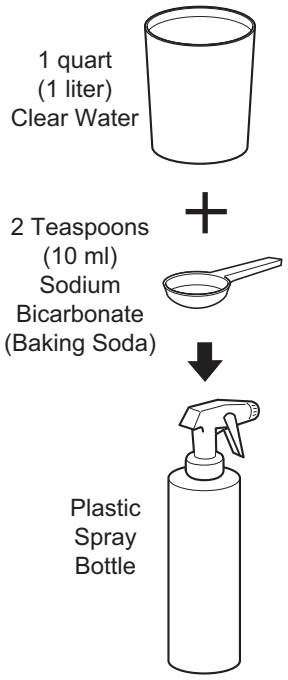

Preparing Acid Neutralizing Solution

BRAKES

⚠ WARNING

To reduce the possibility of severe injury or death, always evaluate pedal travel before operating a vehicle to verify some braking function is present.

All driving brake tests must be done in a safe location with regard for the safety of all personnel.

NOTICE

Over time, a subtle loss of performance may take place; therefore, it is important to establish the standard with a new vehicle.

The Periodic Brake Performance Test should be performed regularly as an evaluation of braking system performance. It is useful as a method of identifying subtle loss of performance over time.

Periodic Brake Test For Mechanical Brakes

The purpose of this test is to compare the braking performance of the vehicle to the braking performance of new or 'known to be good' vehicles or to an established acceptable stopping distance. Actual stopping distances will be influenced by weather conditions, terrain, road surface condition, actual vehicle weight (accessories installed) and vehicle speed. No specific braking distance can be reliably specified. The test is conducted by latching the park brake to eliminate different pedal pressures and to include the affects of linkage mis-adjustment.

Establish the acceptable stopping distance by testing a new or 'known to be good' vehicle and recording the stopping location or stopping distance. For fleets of vehicles, several vehicles should be tested when new and the range of stopping locations or distances recorded.

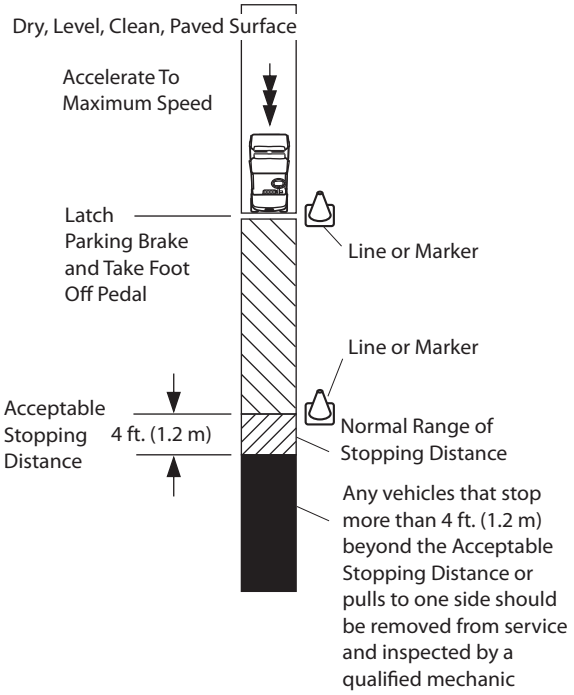

NOTICE

Over time, a subtle loss of performance may take place; therefore, it is important to establish the standard with a new vehicle.

Drive the vehicle at maximum speed on a flat, dry, clean, paved surface. Quickly depress the brake pedal to latch the parking brake at the line or marker in the test area and remove foot from pedal. The vehicle should stop aggressively. The wheel brakes may or may not lock. Observe the vehicle stopping location or measure the vehicle stopping distance from the point at which the brakes were latched. The vehicle should stop within the 'normal' range of stopping distances. If the vehicle stops more than 4 ft. (1.2 m) beyond the acceptable stopping distance or pulls to one side, the vehicle has failed the test and should be tested again.

If the vehicle fails the second test, it should **immediately** be removed from service. The vehicle **must** be inspected by a qualified mechanic who should refer to the TROUBLESHOOTING section in the Technician's Repair and Service Manual.

AIR INTAKE AND COOLING FINS

⚠ WARNING

To prevent possible burns, engine parts should be kept clean to reduce risk of overheating and ignition of accumulated debris. After every off road use, allow to cool and then check for a build up of dirt and debris in the air intake and cooling fins. Dirt and debris may clog the engine's air cooling system. Clean areas shown to prevent engine damage. Keep linkages, springs and controls clean. Keep area around muffler free of any combustible material.

At least once a year, (or more often under adverse conditions) the cooling system should be cleaned. Cleaning will assure an adequate supply of air to the cooling fins. Compressed air may be used for routine cooling system maintenance.

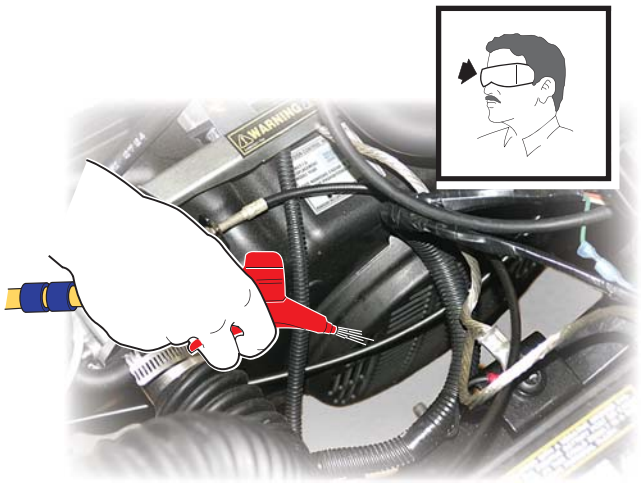

REAR AXLE

The rear axle is provided with a lubricant level check plug located on the driver side at the rear of the housing. Unless leakage of rear axle lubricant is evident, an annual lubricant check is sufficient.

Checking The Lubricant Level

Tool List	**Qty.**
Socket, 13 mm, 3/8" drive	1
Ratchet, 3/8" drive	1
Funnel	1

Clean the area around the check and fill plugs. Remove the check plug. The correct lubricant level is **just** below the bottom of the threaded hole. If lubricant is to be added, remove the fill plug and add lubricant using a funnel. Add lubricant slowly until lubricant starts to seep from the check plug hole. Install the check plug and the fill plug. In the event that the lubricant is to be replaced, a drain plug is provided at the bottom of the differential housing.

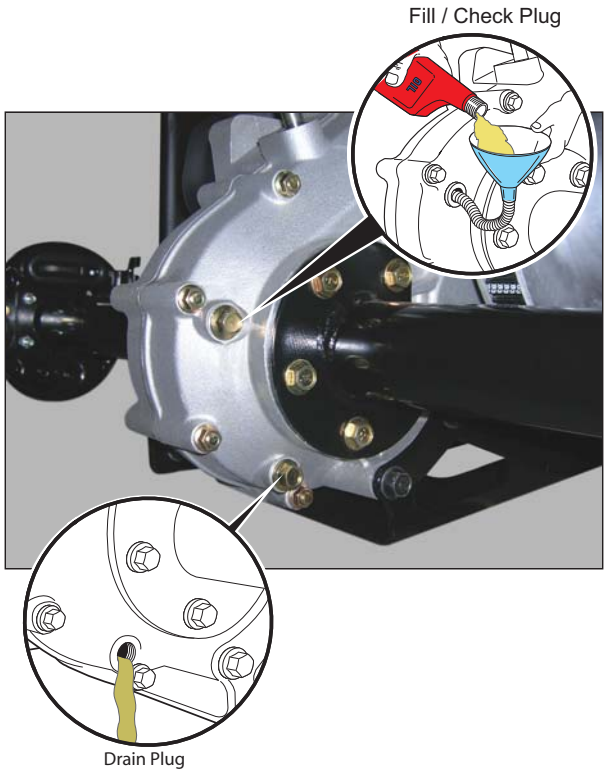

AIR CLEANER INSPECTION AND REPLACEMENT

The air cleaner unit on the vehicle is a dry unit. **Do not** use oil on the filter element or any part of the unit. To aide installation and sealing, petroleum jelly may be applied to back side of cover tabs and each side of filter seal.

Cleaning the Air Filter Element

⚠ CAUTION

Do not use compressed air to clean the air filter; doing so will damage the filter which may result in damage to the engine.

To prevent engine damage, be careful not to let debris fall into the carburetor when servicing the air cleaner.To prevent water entering air cleaner and causing starting or engine problems, replace air cleaner cover making sure the entire flange around the bottom of the cover fits over the top edge of the air cleaner base. Secure with the spring clips.

The air cleaner is a dual filter cleaner, equipped with a foam pre-cleaner over a conventional paper cartridge. The filters must be serviced per the Periodic Service Schedule for optimum engine life and performance.

Access the filters by unsnapping the spring clip on each side of the air cleaner and removing the air cleaner cover. If necessary, vacuum or wipe out any loose dirt or trash from the air cleaner base.

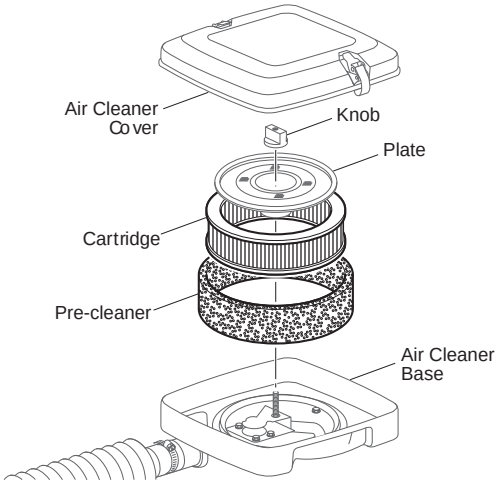

Air Cleaner`

Read all of this manual to become thoroughly familiar with this vehicle. Pay particular attention to all Notices, Cautions, Warnings, and Dangers.

Pre - Cleaner Service

CAUTION

To prevent damage to air filter cartridge and reduced engine performance, do not apply oil to the pre-cleaner.

Carefully remove pre-cleaner from cartridge and wash it in liquid detergent and water. Rinse. Dry by squeezing pre-cleaner in a clean cloth. Replace pre-cleaner and air cleaner cover making sure the entire flange around bottom of cover fits over the top edge of the air cleaner base. Secure with the spring clips.

Cartridge Services

Unscrew the knob securing the cartridge to the air cleaner base and remove plate. Remove cartridge and inspect. Replace if too dirty to clean or at the first sign of filter paper deterioration. Clean cartridge by gently tapping on a flat surface.

CAUTION

Do not use petroleum solvents, pressurized water, or compressed air to clean cartridge. Doing so will damage the cartridge and will damage the engine.

NOTICE

The paper cartridge is a dry unit. Do not use oil on the cartridge.

Replace air cleaner cover making sure that the entire flange around the bottom of the cover fits over the top edge of the air cleaner base. Secure with the spring clips.

Lubrication Points

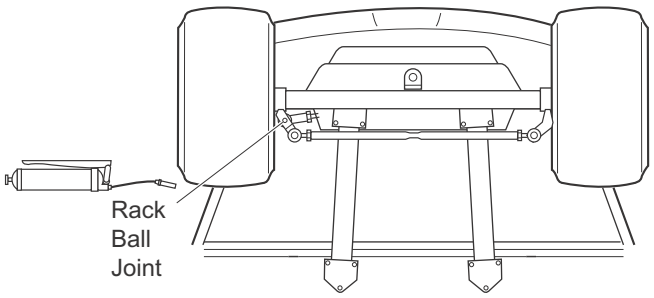

View from Underside of Vehicle

LUBRICATION

CAUTION

Do not use more than three (3) pumps of grease in any grease fitting at any one time. Excess grease may cause grease seals to fail or grease migration into areas that could damage components.

Putting more than three pumps of grease in a grease fitting could damage grease seals and cause premature bearing failure.

Read all of this manual to become thoroughly familiar with this vehicle. Pay particular attention to all Notices, Cautions, Warnings, and Dangers.

SPARK PLUGS

Tool List **Qty.**

Spark plug socket, 13/16", 1/2" drive 1
Ratchet, 1/2" drive 1
Plug gauge, wire type 1
Anti-seize compound ..... AR
Torque wrench, 1/2" drive, ft. lbs. 1

⚠ CAUTION

Use care not to over-tighten the plug. Over-tightening can cause damage to the aluminum cylinder head threads.

Remove and inspect the spark plug at intervals indicated in the Periodic Service Schedule. Spark plug should be properly gapped. Tighten to 16 ft. lbs. (22 Nm) torque

Remove and inspect the spark plug at intervals indicated in the Periodic Service Schedule. Spark plug should be properly gapped. Tighten to 16 ft. lbs. (22 Nm) torque.

Fouled spark plug is indicated by a wet, black appearance. This could be caused by a dirty air filter element or other restrictions in the air intake system. Incorrectly adjusted valves, spark plug wire which are in poor condition or poor quality fuel could also contribute to the problem.

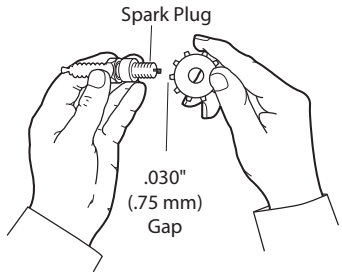

Ref Spg 1S

PROLONGED STORAGE

⚠ WARNING

To reduce the possibility of severe injury or death resulting from a possible explosion:

Do not handle fuel in an area that is not adequately ventilated. Do not smoke near the fuel tank or refuel near open flame or electrical items which could produce a spark.

Store vehicle in a clean, dry area. Do not store in same area as a stove, furnace, water heater, or other appliance that uses a pilot light or has a device that can create a spark.

When refueling, inspect the fuel cap for leaks or breaks that could result in fuel spillage.

Always wear safety glasses while refueling to prevent possible eye injury from gasoline or gasoline vapor.

Keep hands, clothing and jewelry away from moving parts. Use care not to contact hot objects. Raise the rear of the vehicle and support on jack stands before attempting to run the engine.

Preparing the engine for a prolonged storage period (30 days or more) calls for a few simple steps to prevent a build up of varnish and gum in the carburetor and corrosion in the engine.

- Turn the Key Switch to OFF position, and leave the Forward/Reverse switch in the NEUTRAL position during storage.
- Perform all required routine maintenance per the Periodic Service Schedule.
- Properly inflate the tires to recommended pressure (psi) stated on sidewall of tires.
- Place the Forward/Reverse handle in the NEUTRAL position engage the neutral lock, see page 5 - 11.

Read all of this manual to become thoroughly familiar with this vehicle. Pay particular attention to all Notices, Cautions, Warnings, and Dangers.

- Turn the fuel shut-off valve to the closed (OFF) position.
- With proper ventilation, run engine until the remaining fuel in carburetor and fuel lines is depleted and the engine stalls.
- Return the neutral lock to the OPERATE position
- Loosen, but do not remove the carburetor drain screw. Drain any fuel remaining in bowl into an approved container and pour the fuel collected into the vehicle fuel tank. Add Sea Foam (4 oz. for a full tank of fuel) to stabilize fuel and install the tank cap securely.

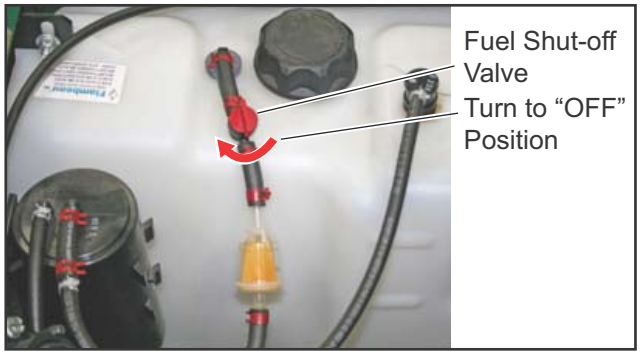

- Tighten the carburetor drain screw.
- Remove spark plug and pour about 1/2 oz. (15 ml) of SAE 10 - 30 weight oil or Fogging oil into the cylinder. Rotate the crankshaft by hand several times, then install the spark plug.
- Do not engage the park brake, but secure the car from rolling
- While engine is still warm, change oil.
- Clean body, chassis and engine of debris, mud, chaff or grass.

CAPACITIES AND REPLACEMENT PARTS

Fuel Tank / Fuel	6.0 gal (22.5 liters) / 87 Octane Min.
Engine Oil	1.4 US qt (1.3 liters)
Oil Filter	P/N 26591-G01
Air Filter	P/N 28463-G01
Spark Plug	NGK BPR2ES (P/N 25523-G3)
	.020 - .030" (.71 - .75 mm) Gap
Starter/Generator Belt	P/N 606138
Clutch Belt	P/N 606136
Rear Axle Oil	51 oz (1.5 liters) / SAE 30
Fuse	15 amp (P/N 18392-G1)
LED Bulb	(P/N 619101)
Headlight Bulb	(P/N 619100)
Turn Signal Bulb	(P/N 619102)
Tail Light Bulb	#1157 (P/N 21759-G1)

Read all of this manual to become thoroughly familiar with this vehicle. Pay particular attention to all Notices, Cautions, Warnings, and Dangers.

PERIODIC SERVICE SCHEDULE

✓ Check ♦ Clean, Adjust, etc. ▲Replace

To perform service that is listed in this schedule but not described in this manual, contact a local Service Representative or see the Repair and Service Manual for this vehicle.

***NOTE**: Some maintenance items must be serviced more frequently on vehicles used under severe driving conditions*

DAILY	
	BEFORE USE: ✓ Check service brake general operation ✓ Check park brake operation - does it hold on a hill. ✓ Check warning device function in reverse ✓ Check tire pressure, condition of tires & rims. ✓ Check smooth operation of accelerator. ✓ Check for loose or missing hardware. ✓ Check Battery - state of charge, condition, loose terminals, corrosion, hold down & hardware ✓ Check overall vehicle condition
WEEKLY (includes items listed in previous table & the following)	
TIRES	✓ Examine for cuts, excessive wear and pressure (See GENERAL SPECIFICATIONS)
WHEELS	✓ Check for bent rims, missing or loose lug nuts
COOLING FAN	✓ Check for build-up of foreign matter inside blower housing and fins, clean if required
ENGINE OIL	✓ Check and add if required - DO NOT OVERFILL
STARTER/GENERATOR BELT	✓ Check for tension, wear, cracks
MONTHLY - 20 HOURS (includes items listed in previous table & the following)	
WIRING	✓ Check all wiring for loose connections and broken/missing insulation
ACCELERATOR	✓ Check for smooth movement - DO NOT LUBRICATE CABLE
SERVICE BRAKE (MECHANICAL BRAKES)	✓ Conduct brake performance test
PARK BRAKE	✓ Check brake performance and adjust if required
CHOKE CABLE	✓ Check for smooth movement and adjustment - DO NOT LUBRICATE CABLE
CARBURETOR LINKAGE	✓ Check attachment, adjust as required
DIRECTION SELECTOR	✓ Check attachment, adjust as required
ENGINE	✓ Check for unusual noise, vibration, acceleration, oil leaks
COOLING FAN	✓ Check for build-up of foreign matter inside blower housing and fins, clean if required
STEERING ASSEMBLY	✓ Check for abnormal play, tightness of all hardware
TIE ROD/LINKAGES	✓ Check for excessive play, bent components or loose connections
REAR AXLE	✓ Check for leakage, add SAE 30 oil as required
QUARTERLY - 60 HOURS (includes items listed in previous tables & the following)	
FRONT AXLE	✓ Check for damage to axle and loose or missing hardware
FRONT SHOCK ABSORBERS	✓ Check for oil leakage and loose fasteners
FRONT SPRINGS	✓ Check for loose hardware, cracks at attachments
FRONT WHEEL ALIGNMENT	✓ Check for unusual tire wear, align if required
PARK BRAKE	✓ Check for bent/binding linkage rod ✓ Check for damage or wear to latch arm or catch bracket ♦ Lubricate as required, use light oil. DO NOT LUBRICATE CABLES OR BRAKE LATCH
REAR SHOCK ABSORBERS	✓ Check for oil leakage, loose mounting hardware
ENGINE ELECTRICAL SYSTEM	✓ Check coil/spark plug wires for cracks/loose connections

Periodic Service Schedule

Read all of this manual to become thoroughly familiar with this vehicle. Pay particular attention to all Notices, Cautions, Warnings, and Dangers.

FUEL SYSTEM	✓ Check for leaks at tank, cap, system lines, filters, pump, carburetor ✓ Check system lines for cracks/deterioration
THROTTLE/GOVERNOR LINKAGE	✓ Check operation and governed speed
HARDWARE AND FASTENERS	✓ Check for loose or missing hardware and components ♦ Tighten or replace missing hardware
SEMI-ANNUAL - 125 HOURS (includes items listed in previous tables & the following)	
BATTERY	♦ Clean battery & terminals
DIRECTION SELECTOR	✓ Check for wear and smooth movement (lubricate shaft with light oil if required)
KING PINS	✓ Check for excessive play and tightness of retaining nuts
STEERING ASSEMBLY	✓ Check bellows and pinion seal for damage or grease leakage
RACK END BALL JOINT	♦ Lubricate, use wheel bearing grease
REAR AXLE	✓ Check for unusual noise and loose or missing mounting hardware
AIR FILTER ELEMENT	✓ Check filter element, clean/replace as required
OIL FILTER	▲ Replace (at oil change)
ENGINE OIL	▲ Replace with SAE 10W-30 or 10W-40 that meets or exceeds SF, SG, CC oil, DO NOT OVERFILL
DRIVE BELT	✓ Check for cracks, fraying and excessive wear
ANNUAL - 250-300 HOURS (includes items listed in previous tables & the following)	
FRONT WHEEL BEARINGS	✓ Check and adjust as required, see Technician's Repair and Service Manual
REAR AXLE	✓ Check lubricant, add lubricant as required
SERVICE BRAKES	♦ Clean and adjust, see Technician's Repair and Service Manual ✓ Check brake shoe linings, see Technician's Repair and Service Manual ✓ Check level, add if required (DOT 3) and check for leakage
FUEL FILTER	▲ Replace
SPARK PLUG	▲ Replace, gap new plug
MUFFLER/EXHAUST	✓ Check mounting hardware; check for leaks at head and muffler gaskets
VALVES	✓ Check cold (intake/exhaust) per Technician's Repair and Service Manual
500 HOURS (includes items listed in previous tables & the following)	
CARBURETOR	♦ Clean
CYLINDER HEAD AND PISTON	♦ Remove carbon from cylinder head and piston ✓ Check valve seats for carbon buildup and clean as required

Periodic Service Schedule

Read all of this manual to become thoroughly familiar with this vehicle. Pay particular attention to all Notices, Cautions, Warnings, and Dangers.

Hardware

Periodically, the vehicle should be inspected for loose fasteners. Fasteners should be tightened in accordance with the Torque Specifications table.

Use care when tightening fasteners and refer to the Technician's Repair and Service Manual for specific torque values.

Generally, three grades of hardware are used in the vehicle. Grade 5 hardware can be identified by the three marks on the hexagonal head and grade 8 hardware is identified by 6 marks on the head. Unmarked hardware is Grade 2.

ALL TORQUE FIGURES ARE IN FT. LBS. (Nm)
Unless otherwise noted in text, tighten all hardware in accordance with this chart.
This chart specifies 'lubricated' torque figures. Fasteners that are plated or lubricated when installed are considered 'wet' and require approximately 80% of the torque required for 'dry' fasteners.

BOLT SIZE	1/4"	5/16"	3/8"	7/16"	1/2"	9/16"	5/8"	3/4"	7/8"	1"
Grade 2	4 (5)	8 (11)	15 (20)	24 (33)	35 (47)	55 (75)	75 (102)	130 (176)	125 (169)	190 (258)
Grade 5	6 (8)	13 (18)	23 (31)	35 (47)	55 (75)	80 (108)	110 (149)	200 (271)	320 (434)	480 (651)
Grade 8	6 (8)	18 (24)	35 (47)	55 (75)	80 (108)	110 (149)	170 (230)	280 (380)	460 (624)	680 (922)

BOLT SIZE	M4	M5	M6	M8	M10	M12	M14			
Class 5.8 (Grade 2)	1 (2)	2 (3)	4 (6)	10 (14)	20 (27)	35 (47)	55 (76.4)			
Class 8.8 (Grade 5)	2 (3)	4 (6)	7 (10)	18 (24)	35 (47)	61 (83)	97 (131)			
Class 10.9 (Grade 8)	3 (4)	6 (8)	10 (14)	25 (34)	49 (66)	86 (117)	136 (184)			

Ref Tsp 1

Notes:

Read all of this manual to become thoroughly familiar with this vehicle. Pay particular attention to all Notices, Cautions, Warnings, and Dangers.

TABLE OF CONTENTS FOR APPENDIX A

TITLE **PAGE NO.**

DECLARATION OF CONFORMITY ..... A - 3

Read all of this manual to become thoroughly familiar with this vehicle. Pay particular attention to all Notices, Cautions, Warnings, and Dangers.

Notes:

Read all of this manual to become thoroughly familiar with this vehicle. Pay particular attention to all Notices, Cautions, Warnings, and Dangers.

DECLARATION OF CONFORMITY

DECLARATION OF CONFORMITY ▪ ДЕКЛАРАЦИЯ ЗА СЪОТВЕТСТВИЕ ▪ PROHLÁŠENÍ O SHODĚ ▪ OVERENSSTEMMELSESERKLÆRING ▪ CONFORMITEITSVERKLARING ▪ VASTAVUSDEKLARATSIOON ▪ VAATIMUSTENMUKAISUUSVAKUUTUS ▪ DECLARATION DE CONFORMITE ▪ KONFORMITÄTSERKLÄRUNG ▪ ΔΗΛΩΣΗ ΣΥΜΜΟΡΦΩΣΗΣ ▪ MEGFELELŐSÉGI NYILATKOZAT ▪ DICHIARAZIONE DI CONFORMITÀ ▪ ATBILSTĪBAS DEKLARĀCIJA ▪ ATITIKTIES DEKLARACIJA ▪ DIKJARAZZJONI TAL-KONFORMITÀ ▪ DEKLARACJA ZGODNOŚCI ▪ DECLARAÇÃO DE CONFORMIDADE ▪ DECLARAȚIE DE CONFORMITATE ▪ VYHLÁSENIE O ZHODE ▪ IZJAVA O SKLADNOSTI ▪ DECLARACIÓN DE CONFORMIDAD ▪ DEKLARATION OM ÖVERENSSTÄMMELSE ▪ SAMRÆMISYFIRLÝSING ▪ KONFORMITETSERKLÆRING

Business name and full address of the manufacturer ▪ Търговско име и пълен адрес на производителя ▪ Obchodní jméno a plná adresa výrobce ▪ Producentens firmanavn og fulde adresse ▪ Bedrijfsnaam en volledig adres van de fabrikant ▪ Tootja ärinimi ja täielik aadress ▪ Valmistajan toiminimi ja täydellinen osoite ▪ Nom commercial et adresse complète du fabricant ▪ Firmenname und vollständige Adresse des Herstellers ▪ Επωνυμία και ταχυδρομική διεύθυνση κατασκευαστή ▪ A gyártó üzleti neve és teljes címe ▪ Ragione sociale e indirizzo completo del fabbricante ▪ Uzņēmuma nosaukums un pilna ražotāja adrese ▪ Verslo pavadinimas ir pilnas gamintojo adresas ▪ Isem kummerċjali u indirizz sħiħ tal-fabbrikant ▪ Nazwa firmy i pełny adres producenta ▪ Nome da empresa e endereço completo do fabricante ▪ Denumirea comercială şi adresa completă a producătorului ▪ Obchodný názov a úplná adresa výrobcu ▪ Naziv podjetja in polni naslov proizvajalca ▪ Nombre de la empresa y dirección completa del fabricante ▪ Tillverkarens företagsnamn och kompletta adress ▪ Fyrirtækisheiti og fullt heimilisfang framleiðanda ▪ Firmanavn og full adresse for produsenten	**E-Z-GO Division of Textron Inc, 1451 Marvin Griffin Road Augusta, GA 30906 USA**
Product Code ▪ Код на продукта ▪ Kód výrobku ▪ Produktkode ▪ Productcode ▪ Toote kood ▪ Tuotekoodi ▪ Code produit ▪ Produktcode ▪ Κωδικός προϊόντος ▪ Termékkód ▪ Codice prodotto ▪ Produkta kods ▪ Produkto kodas ▪ Kodiċi tal-Prodott ▪ Kod produktu ▪ Código do Produto ▪ Cod produs ▪ Kód výrobku ▪ Oznaka proizvoda ▪ Código de producto ▪ Produktkod ▪ Võrunúmer ▪ Produktkode	**605785, 76211, 606697, 605815, 605811, 606688, 605782, 606698, 617791, 615793, 606695, 617795 and 617793, 617340, 618846, 618847, 618855, 618856, 618859, 618860, and 618866 when fitted with CE Kit 614168. 618862, 618864, 619213 and 617795 when fitted with CE KIT 625759.**
Machine Name ▪ Наименование на машината ▪ Název stroje ▪ Maskinnavn ▪ Machinenaam ▪ Masina nimi ▪ Laitteen nimi ▪ Nom de la machine ▪ Maschinenbezeichnung ▪ Ονομασία μηχανήματος ▪ Gépnév ▪ Denominazione della macchina ▪ Iekārtas nosaukums ▪ Mašinos pavadinimas ▪ Isem tal-Magna ▪ Nazwa urządzenia ▪ Nome da Máquina ▪ Numele echipamentului ▪ Názov stroja ▪ Naziv stroja ▪ Nombre de la máquina ▪ Maskinens namn ▪ Heiti tækis ▪ Maskinnavn	**ST, Hauler, Terrain, Express Sx, Lx, and Shuttle 4X_G utility vehicle (gasoline models). E-Z-GO, Cushman or Bad Boy Buggies brands.**
Designation ▪ Предназначение ▪ Označení ▪ Betegnelse ▪ Benaming ▪ Nimetus ▪ Tyyppimerkintä ▪ Pažymėjimas ▪ Bezeichnung ▪ Χαρακτηρισμός ▪ Megnevezés ▪ Funzione ▪ Apzīmējums ▪ Lithuanian ▪ Denominazzjoni ▪ Oznaczenie ▪ Designação ▪ Specificaţie ▪ Označenie ▪ Namen stroja ▪ Descripción ▪ Beteckning ▪ Merking ▪ Konstruksjon	**Utility Vehicle**
Serial Number ▪ Сериен номер ▪ Sériové číslo ▪ Serienummer ▪ Serienummer ▪ Seerianumber ▪ Valmistusnumero ▪ Numéro de série ▪ Seriennummer ▪ Σειριακός αριθμός ▪ Sorozatszám ▪ Numero di serie ▪ Sērijas numurs ▪ Serijos numeris ▪ Numru Serjali ▪ Numer seryjny ▪ Número de Série ▪ Număr de serie ▪ Sériové číslo ▪ Serijska številka ▪ Número de serie ▪ Serienummer ▪ Raðnúmer ▪ Serienummer	**27400976 to 3200000 or 8003600-8009600.**
Conforms to Directives ▪ В съответствие с директивите ▪ Splňuje podmínky směrnic ▪ Er i overensstemmelse med direktiver ▪ Voldoet aan de richtlijnen ▪ Vastab direktiividele ▪ Direktīvien mukainen ▪ Conforme aux directives ▪ Entspricht Richtlinien ▪ Ακολουθήστε πιστά τις Οδηγίες ▪ Megfelel az irányelveknek ▪ Conforme alle Direttive ▪ Atbilst direktīvām ▪ Atitinka direktyvų reikalavimus ▪ Valutazzjoni tal-Konformità ▪ Dyrektywy związane ▪ Cumpre as Directivas ▪ Respectă Directivele ▪ Je v súlade so smernicami ▪ Skladnost z direktivami ▪ Cumple con las Directivas ▪ Uppfyller direktiv ▪ Samræmist tilskipunum ▪ I samsvar med direktiv	**2006/42/EC**
Conformity Assessment ▪ Оценка за съответствие ▪ Hodnocení plnění podmínek ▪ Overensstemmelsesvurdering ▪ Conformiteitsbeoordeling ▪ Vastavushindamine ▪ Vaatimustenmukaisuuden arviointi ▪ Evaluation de conformité ▪ Konformitätsbeurteilung ▪ Διαπίστωση Συμμόρφωσης ▪ Megfelelőség-értékelés ▪ Valutazione della conformità ▪ Atbilstības novērtējums ▪ Atitikties įvertinimas ▪ Livell tal-Qawwa tal-Ħoss Imkejjel ▪ Ocena zgodności ▪ Avaliação de Conformidade ▪ Evaluarea conformităţii ▪ Vyhodnotenie zhodnosti ▪ Ocena skladnosti ▪ Evaluación de conformidad ▪ Bedömning av överensstämmelse ▪ Samræmismat ▪ Konformitetsvurdering	**2006/42/EC Annex II**
Harmonised standards used ▪ Използвани хармонизирани стандарти ▪ Použité harmonizované normy ▪ Brugte harmoniserede standarder ▪ Gebruikte geharmoniseerde standaards ▪ Kasutatud ühtlustatud standardid ▪ Käytetyt yhdenmukaistetut standardit ▪ Normes harmonisées utilisées ▪ Angewandte harmonisierte Normen ▪ Εναρμονισμένα πρότυπα που χρησιμοποιήθηκαν ▪ Harmonizált szabványok ▪ Standard armonizzati applicati ▪ Izmantotie saskaņotie standarti ▪ Panaudoti suderinti standartai ▪ Standards armonizzati użati ▪ Normy spójne powiązane ▪ Normas harmonizadas usadas ▪ Standardele armonizate utilizate ▪ Použité harmonizované normy ▪ Uporabljeni usklajeni standardi ▪ Estándares armonizados utilizados ▪ Harmoniserade standarder som används	**EN 61000-6-2:2005 EN 61000-6-4:2007 EN ISO 5349:2001 EN ISO 11202: 1995**
Technical standards and specifications used ▪ Използвани технически стандарти и спецификации ▪ Použité technické normy a specifikace ▪ Brugte tekniske standarder og specifikationer ▪ Gebruikte technische standaards en specificaties ▪ Kasutatud tehnilised standardid ja spetsifikatsioonid ▪ Käytetyt tekniset standardit ja eritelmät ▪ Spécifications et normes techniques utilisées ▪ Angewandte technische Normen und Spezifikationen ▪ Τεχνικά πρότυπα και προδιαγραφές που χρησιμοποιήθηκαν ▪ Műszaki szabványok és specifikációk ▪ Standard tecnici e specifiche applicati ▪ Izmantotie tehniskie standarti un specifikācijas ▪ Panaudoti techniniai standartai ir techninė informacija ▪ Standards u specifikazzjonijiet tekniċi użati ▪ Normy i specyfikacje techniczne powiązane ▪ Normas técnicas e especificações usadas ▪ Standardele tehnice şi specificaţiile utilizate ▪ Použité technické normy a špecifikácie ▪ Uporabljeni tehnični standardi in specifikacije ▪ Estándares y especificaciones técnicas utilizadas ▪ Tekniska standarder och specifikationer som används ▪ Samræmdir staðlar sem notaðir eru ▪ Benyttede harmoniserte standarder	**ISO 2631-1:1997**
The place and date of the declaration ▪ Място и дата на декларацията ▪ Místo a datum prohlášení ▪ Sted og dato for erklæringen ▪ Plaats en datum van de verklaring ▪ Deklaratsiooni väljastamise koht ja kuupäev ▪ Vakuutuksen paikka ja päivämäärä ▪ Lieu et date de la déclaration ▪ Ort und Datum der Erklärung ▪ Τόπος και ημερομηνία δήλωσης ▪ A nyilatkozat kelte (hely és idő) ▪ Luogo e data della dichiarazione ▪ Deklarācijas vieta un datums ▪ Deklaracijos vieta ir data ▪ Il-post u d-data tad-dikjarazzjoni ▪ Miejsce i data wystawienia deklaracji ▪ Local e data da declaração ▪ Locul şi data declaraţiei ▪ Miesto a dátum vyhlásenia ▪ Kraj in datum izjave ▪ Lugar y fecha de la declaración ▪ Plats och datum för deklarationen ▪ Tæknistaðlar og tæknilýsingar sem notaðar eru ▪ Benyttede tekniske standarder og spesifikasjoner ▪ Staður og dagsetning yfirlýsingar ▪ Sted og dato for erklæringen	**E-Z-GO Division of Textron Inc, 1451 Marvin Griffin Road Augusta, GA 30906 USA**

DECLARATION OF CONFORMITY (CONTINUED)

Signature of the person empowered to draw up the declaration on behalf of the manufacturer, holds the technical documentation and is authorised to compile the technical file, and who is established in the Community.
Подпис на човека, упълномощен да състави декларацията от името на производителя, който поддържащ техническата документация и е оторизиран да изготви техническия файл и е регистриран в общността.
Podpis osoby oprávněné sestavit prohlášení jménem výrobce, držet technickou dokumentaci a osoby oprávněné sestavit technické soubory a založené v rámci Evropského společenství.
Underskrift af personen, der har fuldmagt til at udarbejde erklæringen på vegne af producenten, der er indehaver af dokumentationen og er bemyndiget til at udarbejde den tekniske journal, og som er baseret i nærområdet.
Handtekening van de persoon die bevoegd is de verklaring namens de fabrikant te tekenen, de technische documentatie bewaart en bevoegd is om het technische bestand samen te stellen, en die is gevestigd in het Woongebied.
Ühenduse registrisse kantud isiku allkiri, kes on volitatud tootja nimel deklaratsiooni koostama, kes omab tehnilist dokumentatsiooni ja kellel on õigus koostada tehniline toimik.
Sen henkilön allekirjoitus, jolla on valmistajan valtuutus vakuutuksen laadintaan, jolla on hallussaan tekniset asiakirjat, joka on valtuutettu laatimaan tekniset asiakirjat ja joka on sijoittautunut yhteisöön.
Signature de la personne habilitée à rédiger la déclaration au nom du fabricant, à détenir la documentation technique, à compiler les fichiers techniques et qui est implantée dans la Communauté.
Unterschrift der Person, die berechtigt ist, die Erklärung im Namen des Herstellers abzugeben, die die technischen Unterlagen aufbewahrt und berechtigt ist, die technischen Unterlagen zusammenzustellen, und die in der Gemeinschaft niedergelassen ist.
Υπογραφή ατόμου εξουσιοδοτημένου για την σύνταξη της δήλωσης εκ μέρους του κατασκευαστή, ο οποίος κατέχει την τεχνική έκθεση και έχει την εξουσιοδότηση να ταξινομήσει τον τεχνικό φάκελο και ο οποίος είναι διορισμένος στην Κοινότητα.
A gyártó nevében meghatalmazott személy, akinek jogában áll módosítania a nyilatkozatot, a műszaki dokumentációt őrzi, engedéllyel rendelkezik a műszaki fájl összeállításához, és aki a közösségben letelepedett személy.
Firma della persona autorizzata a redigere la dichiarazione a nome del fabbricante, in possesso Della documentazione tecnica ed autorizzata a costituire il fascicolo tecnico, che deve essere stabilita nella Comunità.
Tās personas paraksts, kura ir pilnvarota deklarācijas sastādīšanai ražotāja vārdā, kurai ir tehniskā dokumentācija, kura ir pilnvarota sagatavot tehnisko reģistru un kura ir apstiprināta Kopienā.
Asmuo, kuris yra gana žinomas, kuriam gamintojas suteikė įgaliojimus sudaryti šią deklaraciją, ir kuris ją pasirašė, turi visą techninę informaciją ir yra įgaliotas sudaryti techninės informacijos dokumentą.
Il-firma tal-persuna awtorizzata li tfassal id-dikjarazzjoni f'isem il-fabbrikant, għandha d-dokumentazzjoni teknika u hija awtorizzata li tikkompila l-fajl tekniku u li hija stabbilita fil-Komunità.
Podpis osoby upoważnionej do sporządzenia deklaracji w imieniu producenta, przechowującej dokumentację techniczną, upoważnioną do stworzenia dokumentacji technicznej oraz wyznaczonej ds. wspólnotowych.
Assinatura da pessoa com poderes para emitir a declaração em nome do fabricante, que possui a documentação técnica, que está autorizada a compilar o processo técnico e que está estabelecida na Comunidade.
Semnătura persoanei împuternicite să elaboreze declarația în numele producătorului, care deține documentația tehnică, este autorizată să compileze dosarul tehnic și este stabilită în Comunitate.
Podpis osoby poverenej vystavením vyhlásenia v mene výrobcu, ktorá má technickú dokumentáciu a je oprávnená spracovať technické podklady a ktorá je umiestnená v Spoločenstve.
Podpis osebe, pooblaščene za izdelavo izjave v imenu proizvajalca, ki ima tehnično dokumentacijo in lahko sestavlja spis tehnične dokumentacije, ter ima sedež v Skupnosti.
Firma de la persona responsable de la declaración en nombre del fabricante, que posee la documentación técnica y está autorizada para recopilar el archivo técnico y que está establecido en la Comunidad.
Undertecknas av den som bemyndigad att upprätta deklarationen å tillverkarens vägnar, innehar den tekniska dokumentationen och är bemyndigad att sammanställa den tekniska informationen och som är etablerad i gemenskapen.
Undirskrift aðilans sem hefur umboð til að gera yfirlýsinguna fyrir hönd framleiðandans, hefur undir höndum tæknigögnin og hefur leyfi til að taka saman tækniskýrsluna, og er viðurkenndur innan evrópska efnahagssvæðisins.
Signaturen til personen som har fullmakt til å utferdige erklæringen på vegne av produsenten, er i besittelse av den tekniske dokumentasjonen, har autorisasjon til å utarbeide den tekniske filen og som har tilhold i EU.

2006/42/EC Annex II 1A: 2
Tim Lansdell
Technical Director
06th October 2011
Ransomes Jacobsen Ltd, West Road, Ransomes Europark, Ipswich, England, IP3 9TT

2006/42/EC Annex II 1A: 10
Christopher W. Spencer
Vice President of Engineering
E-Z-GO Division of Textron Inc,
1451 Marvin Griffin Road
Augusta, GA 30906 USA
06th October 2011

GB United Kingdom · BG Bulgaria · CH Switzerland · CZ Czech Republic · DK Denmark · NL Netherlands · EE Estonia · ES Spain · FI Finland · FR France · DE Germany · GR Greece · HU Hungary

IS Iceland · IT Italy · LI Liechtenstein · LV Latvia · LT Lithuania · MT Malta · NO Norway · PL Poland · PT Portugal · RO Romania · SE Sweden · SK Slovakia · SI Slovenia

Read all of this manual to become thoroughly familiar with this vehicle. Pay particular attention to all Notices, Cautions, Warnings, and Dangers.

Notes:

Read all of this manual to become thoroughly familiar with this vehicle. Pay particular attention to all Notices, Cautions, Warnings, and Dangers.

Notes:

A Textron Company

E-Z-GO Division of Textron Inc.,
1451 Marvin Griffin Road, Augusta, Georgia 30906 - 3852 USA

TO CONTACT US...
North America:

Technical Assistance & Warranty	Phone: 1-800-774-3946, FAX: 1-800-448-8124
Service Parts	Phone: 1-888-GET-E-Z-GO (1-888-438-3946), FAX: 1-800-752-6175
International:	Phone: 001-706-798-4311, FAX: 001-706-771-4609

Service Parts Manuals, as well as Repair and Service Manuals
are available from a local Distributor, an authorized Branch,
Genuine E-Z-GO Parts & Accessories Department or at www.shopezgo.com.

ISO 9001
ISO 14001
BUREAU VERITAS
Certification

Copyrighted Material
This manual may not be reproduced in whole or
in part without the express permission of
E-Z-GO Division of Textron Inc.
Technical Communications Department