A Textron Company

Owner's Guide

622013

ISSUED NOVEMBER 2011 REVISED JANUARY 2012

WELCOME

Thank you for purchasing this vehicle. Before driving the vehicle, we ask you to spend some time reading this Owner's Guide. This guide contains the information that will assist you in maintaining this highly reliable vehicle. Some illustrations may show items that are optional for your vehicle. This guide covers the operation of several vehicles; therefore, some illustrations may not represent your vehicle. Physical differences in controls will be illustrated. Most of the service procedures in this guide can be accomplished using common, automotive hand tools. Contact your service representative on servicing the vehicle in accordance with the Periodic Service Schedule.

Repair or replacement parts are available through your E-Z-GO retailer or E-Z-GO Genuine Service Parts.

The following information is needed when contacting E-Z-GO concerning service or parts for your vehicle:

Vehicle Model _____

SERIAL/VIN Number _____

Read all of this manual to become thoroughly familiar with this vehicle. Pay particular attention to all Notices, Cautions, Warnings, and Dangers.

OWNER'S GUIDE
48 V ELECTRIC POWERED VEHICLE

EXPRESS L6
EXPRESS S6

STARTING MODEL YEAR 2012

Never modify the vehicle in any way that will alter the weight distribution of the vehicle, decrease its stability or increase the speed beyond the factory specifications. Such modifications can cause serious personal injury or death. E-Z-GO Division of Textron, Inc. prohibits and disclaims responsibility for any such modifications or any other alteration which would adversely affect the safety of the vehicle.

E-Z-GO Division of Textron, Inc. reserves the right to incorporate engineering and design changes to products in this manual, without obligation to include these changes on units sold previously.

The information contained in this manual may be revised periodically by E-Z-GO Division of Textron, Inc., and therefore is subject to change without notice.

E-Z-GO Division of Textron, Inc. DISCLAIMS LIABILITY FOR ERRORS IN THIS MANUAL, and SPECIFICALLY DISCLAIMS LIABILITY FOR INCIDENTAL AND CONSEQUENTIAL DAMAGES resulting from the use of the information and materials in this Manual.

TO CONTACT US

E-Z-GO Division of Textron Inc.
1451 Marvin Griffin Road.
Augusta, Georgia, USA 30906-3852

North America:
Technical Assistance & Warranty PHONE: 1-800-774-3946 FAX: 1-800-448-8124
Service Parts PHONE: 1-888-GET-EZGO (1-888-438-3946) FAX: 1-800-752-6175
International:

FOREWORD

Read all of this manual to become thoroughly familiar with this vehicle. Pay particular attention to all Notices, Cautions, Warnings, and Dangers.

This vehicle has been designed and manufactured in the United States of America (USA). The Standards and Specifications listed in the following text originate in the USA unless otherwise indicated.

The use of non-Original Equipment Manufacturer (OEM) approved parts may void the warranty.

Failure to properly maintain batteries may void the warranty. Refer to the battery manual for instructions on the proper maintenance and care of the batteries.

BATTERY PROLONGED STORAGE

All batteries will self-discharge over time. The rate of self-discharge varies depending on the ambient temperature, the age and condition of the batteries.

A fully charged battery will not freeze in winter temperatures unless the temperature falls below -75°F (- 60°C).

For winter storage, the batteries must be clean, fully charged and disconnected from any source of electrical drain.

The battery charger may be left connected to the vehicle to maintain a full charge on the batteries, provided the charger is plugged into an active electrical source. If power to the electrical source is disconnected or interrupted the battery charger will continue to check the charge on the battery pack, this will draw power from the battery pack and eventually drain the batteries if power is not restored in a timely manner.

As with all electric vehicles, the batteries must be checked and recharged as required or at a minimum of 30 day intervals.

TABLE OF CONTENTS

Read all of this manual to become thoroughly familiar with this vehicle. Pay particular attention to all Notices, Cautions, Warnings, and Dangers.

SECTION **PAGE NO.**

SAFETY **1-1**

GENERAL SPECIFICATIONS **2-1**

INTRODUCTION **3-1**

OPERATING PROCEDURES **4-1**

MAINTENANCE **5-1**

Read all of this manual to become thoroughly familiar with this vehicle. Pay particular attention to all Notices, Cautions, Warnings, and Dangers.

Notes:

Read all of this manual to become thoroughly familiar with this vehicle. Pay particular attention to all Notices, Cautions, Warnings, and Dangers.

TITLE **PAGE NO.**

SAFETY **1-3**

NOTICES, CAUTIONS, WARNINGS, AND DANGERS **1-3**

GENERAL **1-4**

GENERAL OPERATION **1-5**

MAINTENANCE **1-5**

VENTILATION **1-6**

GENERAL SAFETY PRACTICES **1-6**

Introductions 1-6

Safety Survey 1-6

Steep Grade 1-7

Wet Areas 1-7

Sharp Turns, Blind Corners, Bridge Approaches 1-7

Loose Terrain 1-7

Golf Car/Pedestrian Interference Areas 1-7

MAINTENANCE **1-7**

Introductions 1-7

Preventive Maintenance 1-7

Parts and Materials 1-7

Ventilation 1-8

Maintenance Procedures 1-8

Maintenance Safety Procedures 1-8

FUELS HANDLING AND STORAGE/BATTERY CHARGING **1-9**

OPERATING SAFETY RULES AND PRACTICES **1-9**

Operator Qualifications 1-9

LABELS AND PICTOGRAMS **1-10**

Notes:

Read all of this manual to become thoroughly familiar with this vehicle. Pay particular attention to all Notices, Cautions, Warnings, and Dangers.

SAFETY

For any questions on material contained in this manual, contact an authorized representative for clarification.

Read and understand all labels located on the vehicle. Always replace any damaged or missing labels.

On steep hills it is possible for vehicles to coast at greater than normal speeds encountered on a flat surface. To prevent loss of vehicle control and possible serious injury, speeds should be limited to no more than the maximum speed on level ground. See GENERAL SPECIFICATIONS. Limit speed by applying the service brake.

Catastrophic damage to the drivetrain components due to excessive speed may result from driving the vehicle above specified speed. Damage caused by excessive speed may cause a loss of vehicle control, is costly, is considered abuse and will not be covered under warranty.

Use extra caution when towing the vehicle. Do not tow a single vehicle at speeds in excess of 12 mph (19 kph). If the vehicle is to be used in a commercial environment, signs similar to the ones illustrated should be used to warn of situations that could result in an unsafe condition.

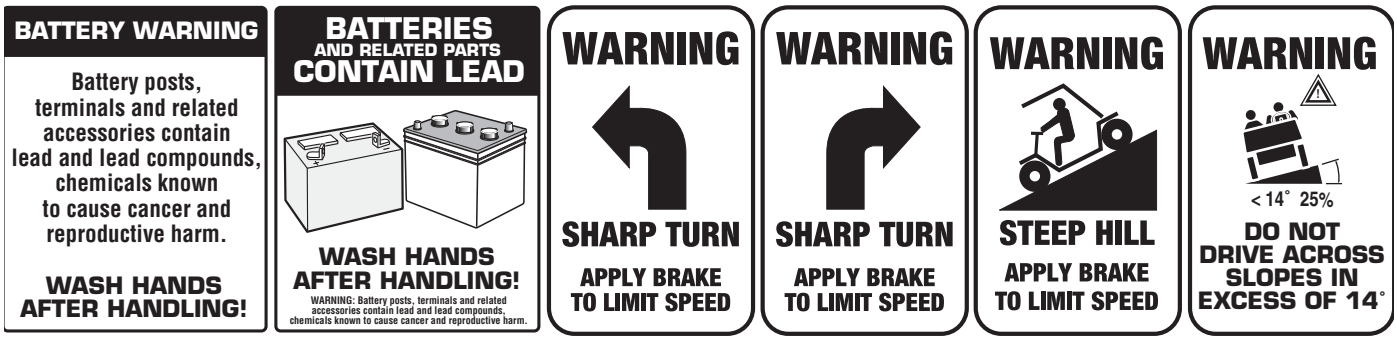

Observe these **NOTICES, CAUTIONS, WARNINGS** and **DANGERS**; be aware that servicing a vehicle requires mechanical skill and a regard for conditions that could be hazardous. Improper service or repair may damage the vehicle or render it unsafe.

NOTICES, CAUTIONS, WARNINGS, AND DANGERS

Throughout this guide **NOTICE, CAUTION, WARNING,** and **DANGER** will be used. Please observe these **NOTICES, CAUTIONS, WARNINGS,** and **DANGERS;** be aware that servicing a vehicle requires mechanical skill and a regard for conditions that could be hazardous. Improper service or repair may damage the vehicle or render it unsafe.

NOTICE

Address practices not related to personal injury.

CAUTION

Indicates a hazardous situation which, if not avoided, could result in minor or moderate injury.

WARNING

Indicates a hazardous situation which, if not avoided, could result in death or serious injury.

DANGER

Indicates a hazardous situation which, if not avoided, will result in death or serious injury.

Read all of this manual to become thoroughly familiar with this vehicle. Pay particular attention to all Notices, Cautions, Warnings, and Dangers.

This manual has been designed to assist in maintaining the vehicle in accordance with procedures developed by the manufacturer. Adherence to these procedures and troubleshooting tips will ensure the best possible service from the product. To reduce the chance of personal injury or property damage, the following must be carefully observed:

CAUTION

Certain replacement parts can be used independently and/or in combination with other accessories to modify an E-Z-GO-manufactured vehicle to permit the vehicle to operate at or in excess of 20 mph. When an E-Z-GO-manufactured vehicle is modified an any way by the Distributor, Dealer or customer to operate at or in excess of 20mph, UNDER FEDERAL LAW the modified product will be a Low Speed Vehicle (LSV) subject to the strictures and requirements of Federal Motor Vehicle Safety Standard 571.500. In these instances, pursuant to Federal law the Distributor or Dealer MUST equip the product with headlights, rear lights, turn signals, seat belts, top, horn and all other modifications for LSV's mandated in FMVSS 571.500, and affix a Vehicle Identification Number to the product in accordance with the requirements of FMVSS 571.565. Pursuant to FMVSS 571.500, and in accordance with the State laws applicable in the places of sale and use of the product, the Distributor, Dealer or customer modifying the vehicle also will be the Final Vehicle Manufacturer for the LSV, and required to title or register the vehicle as mandated by State law.

E-Z-GO will NOT approve Distributor, Dealer or customer modifications converting E-Z-GO products into LSV's.

The Company recommends that all E-Z-GO products sold as personal transportation vehicles BE OPERATED ONLY BY PERSONS WITH VALID DRIVERS LICENSES, AND IN ACCORDANCE WITH APPLICABLE STATE REQUIREMENTS. This restriction is important to the SAFE USE AND OPERATION of the product.

All customers should adhere to this SAFETY RESTRICTION, in connection with the use of all E-Z-GO products, new and used, the Distributor or Dealer has reason to believe may be operated in personal transportation applications.

Information on FMVSS 571.500 can be obtained at Title 49 of the Code of Federal Regulations, section 571.500, or through the Internet at the website for the U.S. Department of Transportation - at Dockets and Regulation, then to Title 49 of the Code of Federal Regulations (Transportation)

GENERAL

All vehicles can be used for a variety of tasks beyond the original intended use of the vehicle; therefore, it is impossible to anticipate and warn against every possible combination of circumstances that may occur. No warning can take replace good common sense and prudent driving practices.

Good common sense and prudent driving practices do more to prevent accidents and injury than all of the warnings and instructions combined. E-Z-GO strongly suggests that all users and maintenance personnel read this entire manual paying particular attention to the CAUTIONS, WARNINGS and DANGERS contained therein.

If you have any questions regarding this vehicle, contact your E-Z-GO dealer or write to the address on the back cover of this publication, Attention: Customer Care Department.

E-Z-GO reserves the right to make design changes without obligation to make these changes on units previously sold. The information contained in this manual is subject to change without notice.

E-Z-GO IS NOT LIABLE FOR ERRORS IN THIS MANUAL. E-Z-GO IS NOT LIABLE FOR INCIDENTAL OR CONSEQUENTIAL DAMAGES THAT RESULT FROM THE USE OF THE MATERIAL IN THIS MANUAL.

This vehicle conforms to the current applicable standard(s) for safety and performance requirements.

These vehicles are designed and manufactured for off-road use. They DO NOT conform to Federal Motor Vehicle Safety Standards of the United States of America (USA) and are not equipped for operation on public streets. Some communities may permit these vehicles to be operated on their streets on a limited basis and in accordance with local ordinances.

With electric powered vehicles, be sure that all electrical accessories are grounded directly to the battery (-) post. **Never use the chassis or body as a ground connection.**

Refer to GENERAL SPECIFICATIONS for vehicle seating capacity.

Never modify the vehicle in any way that will alter the weight distribution of the vehicle, decrease its stability or increase the speed or extend the stopping distance beyond the factory specification. Such modifications can result in serious personal injury or death.

Do not make any such modifications or changes. E-Z-GO prohibits and disclaims responsibility for all such modifications or and alterations which would adversely affect the safety of the vehicle.

Vehicles that are capable of higher speeds must limit their speed to no more than the speed of other vehicles when used in a golf course environment. Additionally, speed should be further moderated by the environmental conditions, terrain and common sense.

Operation of the vehicle is limited to persons above the height of 59 inches (150 cm).

GENERAL OPERATION

ALWAYS:

- use the vehicle in a responsible manner and maintain the vehicle in safe operating condition
- read and observe all warnings and operation instruction labels affixed to the vehicle
- follow all safety rules established in the area where the vehicle is being operated
- Leave the vehicle when there is a risk of lightning.
- reduce speed to compensate for poor terrain or conditions
- apply service brake to control speed on steep grades
- maintain adequate distance between vehicles
- reduce speed in wet areas
- use extreme caution when approaching sharp or blind turns
- use extreme caution when driving over loose terrain
- use extreme caution in areas where pedestrians are present

MAINTENANCE

ALWAYS:

- replace damaged or missing warning, caution or information labels
- maintain the vehicle in accordance with the manufacturer’s periodic service schedule
- ensure that repairs are performed by trained and qualified personnel
- follow the manufacturer’s maintenance procedures
- insulate any tools used within the battery area in order to prevent sparks or battery explosion
- check the polarity of each battery terminal and be sure to rewire the batteries correctly
- use specified replacement parts, NEVER use replacement parts of lesser quality
- use recommended tools
- determine that tools and procedures not specifically recommended by the manufacturer will not compromise the safety of personnel nor jeopardize the safe operation of the vehicle

- support the vehicle using wheel chocks and jack stands, NEVER get under a vehicle that is supported by a jack, lift the vehicle in accordance with the manufacturer's instructions
- maintain the vehicle in an area away from exposed flame or persons who are smoking
- be aware that a vehicle that is not performing as designed is a potential hazard and must not be operated
- test drive the vehicle after any repairs or maintenance in a safe area that is free of both vehicular and pedestrian traffic
- keep complete records of the maintenance history of the vehicle

The manufacturer cannot anticipate all situations, therefore people attempting to maintain or repair the vehicle must have the skill and experience to recognize and protect themselves from potential situations that could result in severe personal injury or death and damage to the vehicle. Use extreme caution and, if unsure as to the potential for injury, refer the repair or maintenance to a qualified mechanic.

VENTILATION

Hydrogen gas is generated in the charging cycle of batteries and is explosive in concentrations as low as 4%. Because hydrogen gas is lighter than air, it will collect in the ceiling of buildings necessitating proper ventilation. Five air exchanges per hour is considered the minimum requirement.

NEVER charge a vehicle in an area that is subject to flame or spark. Pay particular attention to natural gas or propane water heaters and furnaces.

Always use a dedicated circuit for each battery charger. Do not permit other appliances to be plugged into the receptacle when the charger is in operation.

Chargers must be installed and operated in accordance with charger manufacturers recommendations or applicable electrical code (whichever is higher).

GENERAL SAFETY PRACTICES

Introduction

Like other machines, golf cars can cause injury if improperly used or maintained. This section contains broad safety practices recommended for safe golf car operations. Before operation, the controlling party should establish such additional specific safety practices as may be reasonably required for safe operations.

Experience has shown that golf cars which comply with the provisions stated in Part II of this Standard are safe when properly operated in accordance with the safety and operation warnings affixed to every golf car. The safe operation is enhanced when the golf cars are operated within a specific set of operation instructions, safety rules and practices established to meet actual operating terrain and conditions.

The safety information contained in Part II is intended to provide the controlling party with basic safety information and to encourage the controlling party to implement a golf car safety program.

It is suggested and recommended that Part II be reprinted in the golf car manufacturer's operation and service manuals to encourage safe operations and practices at the controlling party's facility.

Safety Survey

The controlling party shall perform a safety survey periodically, and as conditions warrant to their premises, to identify areas where golf cars should not be operated and to identify possible hazards.

Steep Grade

In areas where steep grades exist, golf car operations should be restricted to the designated golf car pathways where possible, and shall be identified with a suitable warning giving the following information: “Warning, steep grade, descend slowly with one foot on brake.”

Wet Areas

Wet grassy areas may cause a golf car to lose traction and may affect stability. Wet areas shall be chained or roped off to prevent golf car operations or be identified by a suitable warning not to operate golf cars in this area due to wet terrain.

Sharp Turns, Blind Corners, Bridge Approaches

Sharp turns, blind spots, bridge approaches and other potentially hazardous areas shall be either chained or roped off to prevent golf car operations or identified with a suitable warning to the operator of the nature of the hazard and stating the proper precautions to be taken to avoid the hazard.

Loose Terrain

Loose terrain may cause a golf car to lose traction and may affect stability. Areas of loose terrain should be repaired if possible, or chained or roped off to prevent golf car operation or identified by a suitable warning to operators not to operate golf cars in this area due to loose terrain or possible hazardous conditions.

Golf Car/Pedestrian Interference Areas

Areas where pedestrians and golf cars interfere shall be avoided whenever possible by rerouting the golf car traffic or the pedestrian traffic to eliminate the interference. If elimination of the interference is not possible or is highly impractical, signs shall be erected warning pedestrians of the golf car traffic and golf car operators of the pedestrian traffic and to drive slowly and use extreme caution.

MAINTENANCE

Introduction

Golf cars may become hazardous if maintenance is neglected or improperly performed. Therefore maintenance facilities, trained personnel and procedures in accordance with the manufacturer’s recommendations should be provided by the controlling party.

Preventive Maintenance

A regularly scheduled inspection and preventive maintenance program in accordance with the manufacturer’s recommendations should be established. Such a program will be a valuable tool in providing the golfing patron with a safe, properly operating golf car and thereby help to avoid accidents.

Personnel

Only qualified, trained and authorized personnel shall be permitted to inspect, adjust and maintain golf cars.

Parts and Materials

Only manufacturer’s recommended replacement parts and materials shall be used.

Ventilation

Maintenance and storage areas shall be properly ventilated to avoid fire hazards in accordance with applicable fire codes and ordinances.

Ventilation for gasoline powered golf cars shall be provided to remove flammable vapors, fumes and other flammable materials. Consult applicable fire codes for specific levels of ventilation.

Ventilation for electric powered golf cars shall be provided to remove the accumulation of flammable hydrogen gas emitted during the charging process. The amount of hydrogen gas emitted depends upon a number of factors such as the condition of the batteries, the output rate of the battery charger and the amount of time the batteries are on charge. Hydrogen emissions are generally considered to be in the area of 10 to 20 cubic liters per car per charge. Because of the highly volatile nature of hydrogen gas and its propensity to rise and accumulate at the ceiling in pockets, a minimum of 5 air changes per hour is recommended. The controlling party shall consult applicable fire and safety codes for the specific ventilation levels required as well as the use of explosion proof electrical apparatus.

Maintenance Procedures

All maintenance shall be performed in accordance with the manufacturer's recommended maintenance procedures as outlined in the manufacturer's operation and service manuals.

Maintenance Safety Procedures

All maintenance shall be performed in accordance with the manufacturer's recommended safety procedures as outlined in the manufacturer's operation and service manuals. The following list of recommended safety procedures are general in nature and in no way supersede the manufacturer's specific instructions.

Follow manufacturer's instructions for immobilizing golf car before beginning any maintenance.

Block chassis before working underneath golf car.

Before disconnecting any part of the fuel system, drain the system and turn all shut off valves to the 'OFF' position to prevent leakage or accumulation of flammable fuels in the work area.

Avoid fire hazards and have fire protection equipment available.

Before performing any maintenance on an electric golf car, disable the electrical system in accordance with the manufacturer's instructions.

Use only properly insulated tools when working on electrically powered golf cars or around batteries.

Brakes, steering mechanisms, warning devices, governors and all other safety devices shall be inspected and maintained in a safe and proper operating condition and shall not be modified as supplied by the manufacturer.

After each maintenance or repair the golf car shall be driven by qualified, trained and authorized personnel to ensure proper operation and adjustment.

Driving golf car to check for proper operation and adjustment after repair shall be performed in an area that is free of vehicular and pedestrian traffic.

Record all maintenance performed in a maintenance record log by date, name of person performing maintenance and type of maintenance. Controlling party management should periodically inspect maintenance log to ensure currency

and completeness of entries.

Provide operator comment cards to assist in identifying non-periodic maintenance needs for specific golf cars.

The controlling party shall maintain in a legible condition all nameplates, warnings and instructions which are supplied by the manufacturer.

The controlling party shall not perform any modification or addition which affects capacity or safe operation, or make any change not in accordance with the owner's manual without the manufacturer's prior written authorization. Where authorized modifications have been made, the controlling party shall ensure that capacity, operation, warning and maintenance instruction plates, tags or decals are changed accordingly.

The manufacturer shall be contacted to secure new nameplates, warnings or instructions which shall then be affixed in their proper place on the golf car.

FUELS HANDLING AND STORAGE/BATTERY CHARGING

The controlling party shall supervise the storage and handling of liquid fuels in accordance with applicable fire and safety requirements.

Storage and handling of liquefied petroleum gas fuels shall be in accordance with American Gas Association recommendations and applicable fire safety requirements.

The controlling party shall require battery changing and charging facilities and procedures to be in accordance with applicable ordinances or regulations

OPERATING SAFETY RULES AND PRACTICES

Operator Qualifications

Only authorized persons shall be allowed to operate golf cars. It is recommended that no persons be allowed to operate golf cars except those persons who posses a valid motor vehicle driver's license.

The controlling party shall display the operation and safety instructions as recommended by the golf car manufacturers and the golf course safety rules in a conspicuous place near the golf car rental area or golf car pick-up area. It is also recommended, as with all motor vehicles, that the warning "Do not operate golf cars when under the influence of alcohol or drugs." be posted in a conspicuous location.

LABELS AND PICTOGRAMS

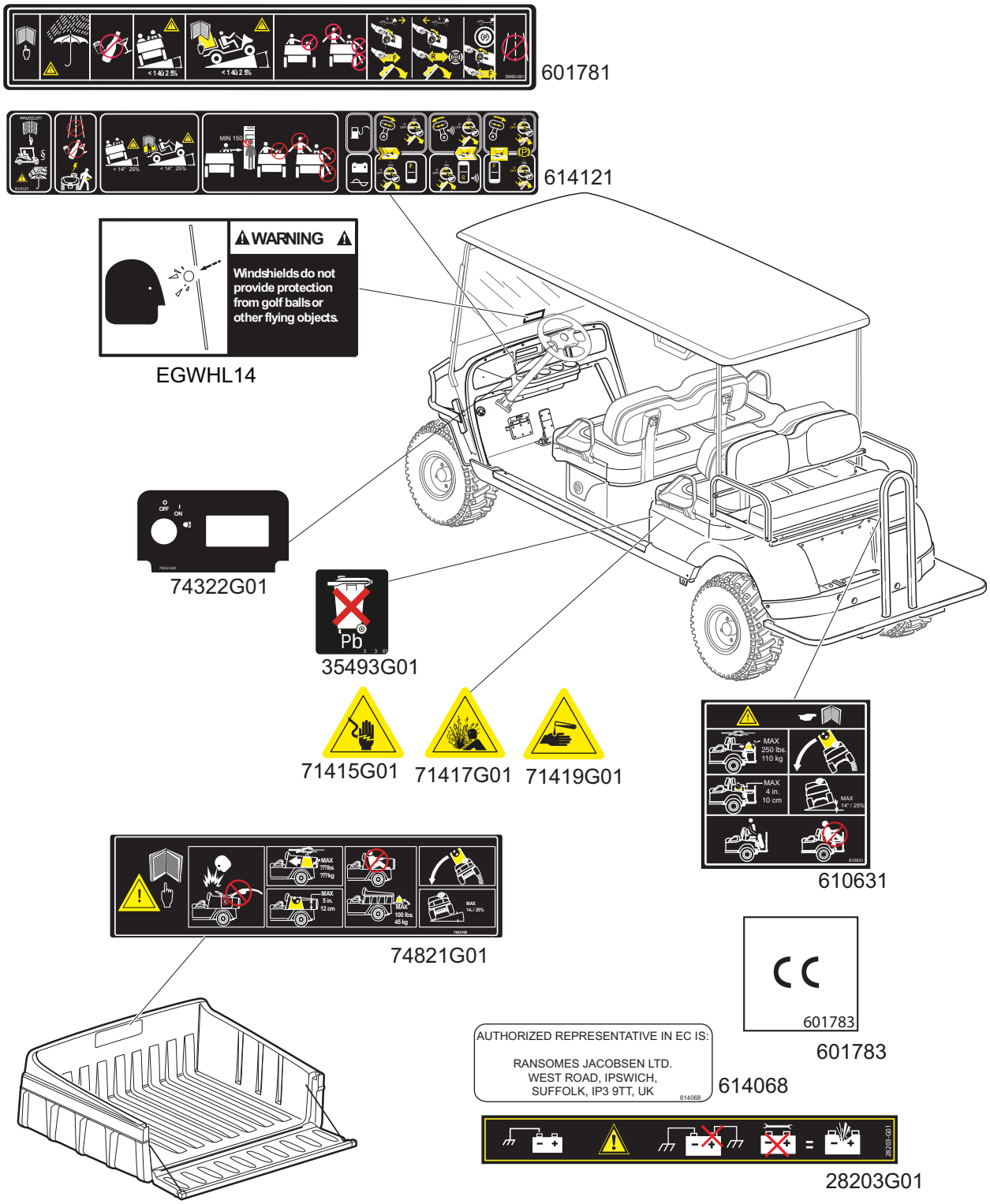

1.

WARNING

2. 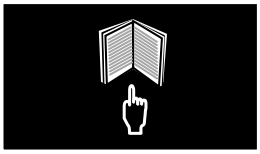

READ MANUAL

3.

WARNING
USE CAUTION IN
INCLEMENT WEATHER

4.

WARNING
DO NOT OPERATE
UNDER THE INFLUENCE
OF DRUGS OR ALCOHOL

5.

MAXIMUM
CROSS HILL/RAMP
ANGLE AS SPECIFIED

6.

WARNING
MAXIMUM CROSS
HILL/RAMP ANGLE
AS SPECIFIED

7. 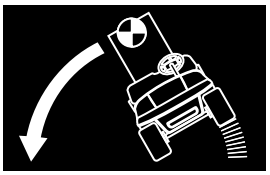

LOAD WITH
HIGH CENTER
OF GRAVITY
COULD RESULT
IN TIP OVER

8. 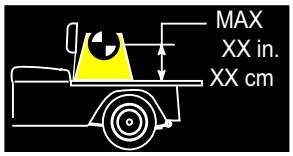

LOAD
CENTER
OF GRAVITY,
MAXIMUM
HEIGHT

9. 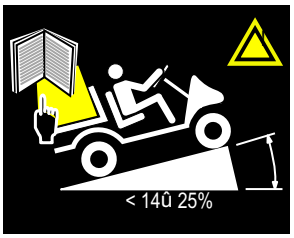

WARNING
READ MANUAL
FOR MAXIMUM
LOAD BED
CAPACITY.
MAXIMUM RAMP/HILL

10. 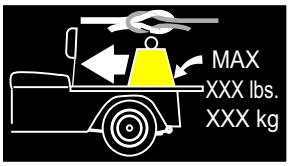

SECURE LOAD
AS FAR FORWARD
AS POSSIBLE.
MAXIMUM LOAD BED
CAPACITY

11.

DO NOT RIDE IN
LOAD BED

12. 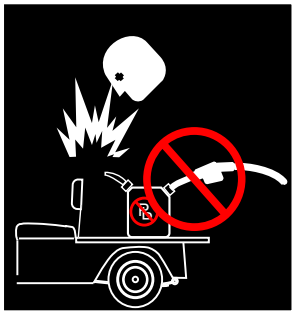

DANGER OF EXPLOSION
DO NOT FILL GAS CAN
IN LOAD BED

13. 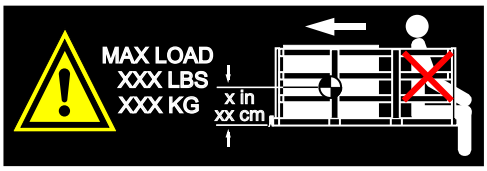

WARNING
MAXIMUM LOAD
& CENTER OF
GRAVITY.
KEEP LOAD
AS FAR
FORWARD AS
POSSIBLE.
DO NOT RIDE
IN LOAD BED

14. 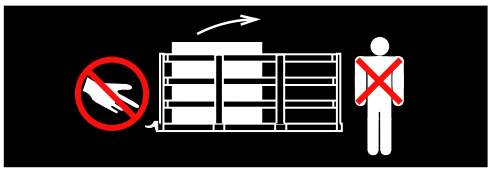

KEEP HANDS &
FINGERS AWAY
FROM DUMP BED.
DO NOT STAND
BEHIND DUMP
BED

15.

CLEAN UP GASOLINE SPILLS WITH WATER BEFORE STARTING ENGINE

16.
UNLEADED GASOLINE

17.
DO NOT SPILL FUEL ON A HOT ENGINE

18.
GROUND FUEL PUMP

19.
LOW OIL PRESSURE

20. 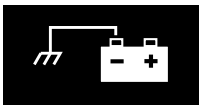
NEGATIVE GROUND BATTERY

21. 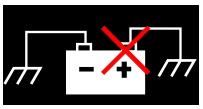
DO NOT CONNECT POSITIVE BATTERY TERMINAL TO GROUND

22.
SHORTING BATTERY TERMINALS MAY CAUSE EXPLOSION

23.
NO TAMPERING. KEEP HANDS OUT

24.
WARNING CORROSIVE

25.
WARNING EXPLOSIVE

26.
WARNING LETHAL VOLTAGE

27.
DO NOT EXPOSE TO FLAME

28.
DO NOT DISPOSE OF BATTERIES IN LANDFILL

29.
DO NOT DRIVE ON HIGHWAY

30. 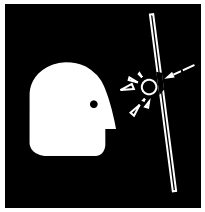
WINDSHIELDS DO NOT PROVIDE PROTECTION FROM FLYING OBJECTS

31.
BATTERIES ARE HEAVY. USE CARE LIFTING

32.
USE INSULATED TOOLS

33.
WEAR EYE PROTECTION

34.
NO SMOKING

35. 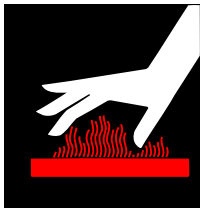
HOT SURFACE

36.
OPERATE FROM DRIVERS SIDE ONLY

37.

KEEP ARMS
AND LEGS
WITHIN VEHICLE

38. 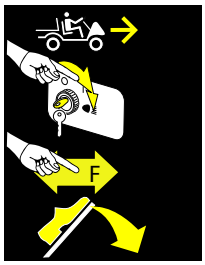

TO OPERATE VEHICLE IN FORWARD:
Q TURN KEY TO ON
Q MOVE DIRECTION SELECTOR TO FORWARD
Q DEPRESS ACCELERATOR PEDAL AND ACCELERATE SMOOTHLY

39. 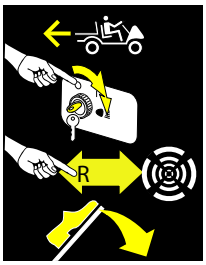

TO OPERATE VEHICLE IN REVERSE:
Q TURN KEY TO ON
Q MOVE DIRECTION SELECTOR TO REVERSE
Q AN AUDIBLE DEVICE WILL SOUND
Q DEPRESS ACCELERATOR PEDAL AND ACCELERATE SMOOTHLY

40. 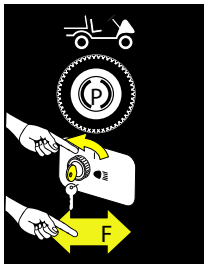

TO LEAVE A GASOLINE POWERED VEHICLE IN PARK:
Q APPLY PARKING BRAKE
Q TURN KEY TO OFF
Q MOVE DIRECTION SELECTOR TO FORWARD

41. 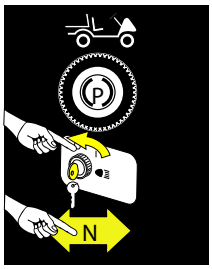

TO LEAVE AN ELECTRIC POWERED VEHICLE IN PARK:
Q APPLY PARKING BRAKE
Q TURN KEY TO OFF
Q MOVE DIRECTION SELECTOR TO NEUTRAL

42.

KEEP CLEAR
HAND OR
FINGERS CAN
BE TRAPPED

43.

ON
POSITION

44.

OFF
POSITION

45.

HEADLIGHTS

46. 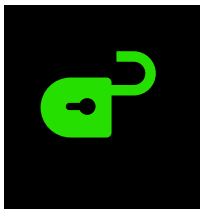

UNLOCKED

47.

LOCKED

48. 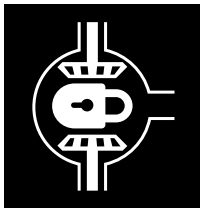

DIFFERENTIAL
LOCKED

49.

WARNING
KEEP ENTIRE BODY
INSIDE CAR

50. 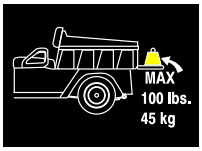

MAXIMUM
TAILGATE
LOAD

51.

ENGINE
CRANKING
POSITION

52. 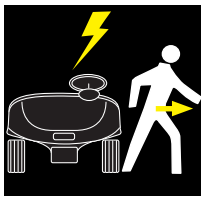

LEAVE VEHICLE
WHEN LIGHTNING
IS IN THE AREA

53. 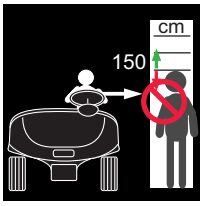

MINUMUM HEIGHT
TO OPERATE
VEHICLE

Notes:

GENERAL SPECIFICATIONS

Read all of this manual to become thoroughly familiar with this vehicle. Pay particular attention to all Notices, Cautions, Warnings, and Dangers.

TITLE **PAGE NO.**

EXPRESS S6 Vehicle Specifications ..... **2 - 3**

EXPRESS S6 Vehicle Dimensions ..... **2 - 4**

EXPRESS S6 Vehicle Incline Information and Turning Diameter ..... **2 - 5**

EXPRESS L6 Vehicle Specifications ..... **2 - 7**

EXPRESS L6 Vehicle Dimensions ..... **2 - 8**

EXPRESS L6 Vehicle Incline Information and Turning Diameter ..... **2 - 9**

Read all of this manual to become thoroughly familiar with this vehicle. Pay particular attention to all Notices, Cautions, Warnings, and Dangers.

Notes:

Read all of this manual to become thoroughly familiar with this vehicle. Pay particular attention to all Notices, Cautions, Warnings, and Dangers.

A Textron Company

MODEL: EXPRESS S6
TYPE: ELECTRIC POWERED PERSONNEL CARRIER
MODEL YEAR: 2012
Part No: 618865

PRODUCT SPECIFICATION

CONFIGURATION HIGHLIGHTS

Precision Drive System™ (PDS): Factory programmable to application

- Solid State continuously variable seperately excited speed controller
- Dash mounted direction selector switch (Forward-Neutral-Reverse)
- Anti-roll back, walkaway braking and alarm
- Anti-stall motor protection
- Regenerative 'Pedal Down' and/or 'Pedal Up' braking
- Eight, 6 Volt Deep Cycle
- Full torque, reduced speed reverse
- Inductive throttle sensor
- Diagnostic indicator
- Factory selectable performance options

Battery Charger: Delta Q, 48 VDC. H120/230 VAC 50/60 Hz. Underwriters Laboratories (U.L.) Listed, (C.S.A. Certified)
Motor: 48 volt DC shunt wound, brazed armature, solid copper windings. Non-vented 15.2 hp (11.3 kW) at 1600 rpm (1hour)
Drive Train: Direct motor shaft connected to transaxle pinion shaft
Electrical System: 48 Volt DC, eight, 6 volt deep cycle storage batteries (107 minute, 225 amp-hour @ 20 hr. discharge rate)
Transaxle: Differential with helical gears
Brakes: Dual rear wheel mechanical self-adjusting drum brakes. Automatic single point park brake release with self-compensating system.
Capacity: Choice of 6 seats (Std) or 4 seats and optional Wood Stake Sides or Roto-molded Cargo box.
Cargo Bed: Roto-molded cross-linked polyethelene. Removable hinged multi-position tailgate requires no latch mechanism.

PRODUCT OVERVIEW

Dimensions

Overall Length	135.8 in (345.0 cm)
Overall Width	49.0 in (124.0 cm)
Overall Height	48.8 in (124.0 cm)
Overall Height (With Canopy)	72.0 in (183.0 cm)
Wheel Base	99.5 in (253.0 cm)
Front Wheel Track	37.8 in (96.0 cm)
Rear Wheel Track	38.5 in (98.0 cm)
Gnd Clearance @ Differential	5.5 in (14.0 cm)

Vehicle Power

Power Source	48 Volts DC
Motor Type	Shunt Wound
Continuous Horsepower (kW)	2.5 hp (1.9 kW)
Intermittent Horsepower (kW)	18.1 hp (13.5 kW) @ 1900 rpm
Electrical System	48 Volt
Batteries (Qty, Type)	Eight, 6 Volt Deep Cycle
Key or Pedal Start	Pedal Start
Battery Charger	48 VDC Delta Q, 120/230 VAC, UL & CSA
Speed Controller	400 Amp Precision Drive System (PDS)
Drive Train	Motor Shaft Direct Drive
Transaxle	Differential with helical gears
Gear Selection	Dash Mounted Forward-Neutral-Reverse
Rear Axle Ratio	14.7:1

Performance

Seating Capacity	Passenger 4/6
Dry Weight	919.0 lb (417.0 kg) (Without Batteries)
Curb Weight	1415.0 lb (642.0 kg)
Vehicle load capacity	1200.0 lb (544.0 kg)
Outside Clearance Circle	35.6 ft (10.9 m)
Speed Level Ground	16.0 mph ± 0.5 mph (25.7 kph)
Speed - Reverse	6.9 mph (11.1 kph)

Steering & Suspension

Steering	Self-compensating rack and pinion
Front Suspension	Leaf springs with hydraulic shock absorbers
Rear Suspension	Leaf springs with hydraulic shock absorbers
Service Brake	Rear wheel mechanical self-adjusting drum
Parking Brake	Self-compensating, single point engagement
Front Tires	SpeedRacer Tires 18x10-10, Diamond Wheel

Body & Chassis

Body & Chassis	0
Frame	Welded steel with DuraShield™ powder coat
Front Body & Finish	Injection molded TPO
Rear Body & Finish	Injection molded TPO
Seat Pod & Finish	Fiberglass & Gelcoat

Some items shown may be optional equipment

Specifications are subject to change without notice
* Field installed accessories may require installation charges

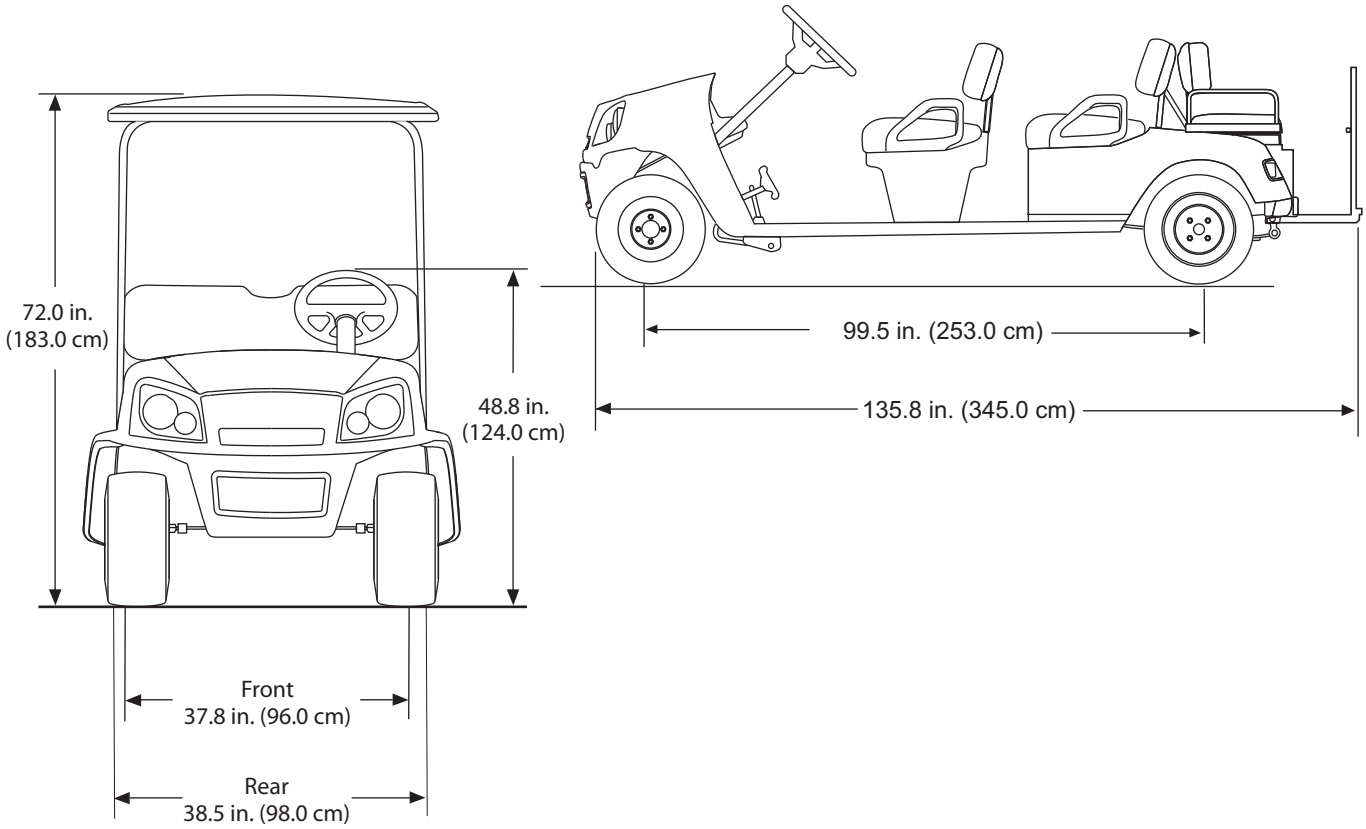
72.0 in.
(183.0 cm)
48.8 in.
(124.0 cm)
99.5 in. (253.0 cm)
135.8 in. (345.0 cm)
Front
37.8 in. (96.0 cm)
Rear
38.5 in. (98.0 cm)

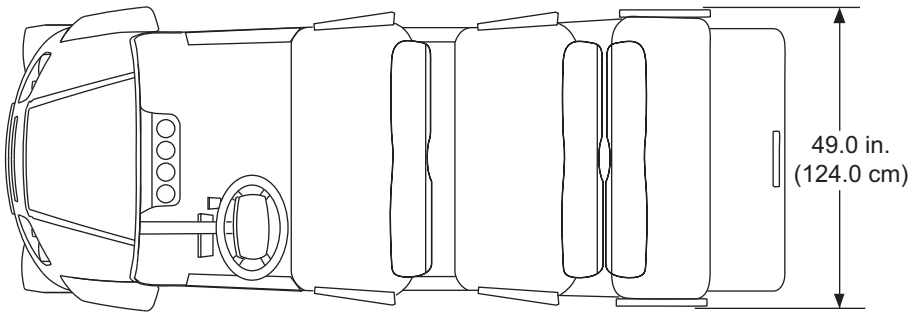
49.0 in.
(124.0 cm)

EXPRESS S6

EXPRESS S6

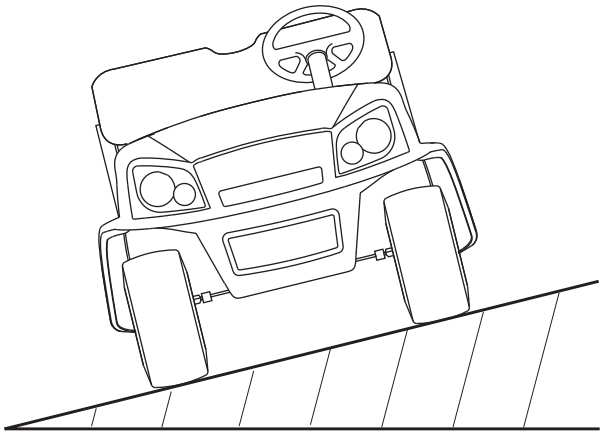

RECOMMENDED MAX SIDE TILT
25% or 14° MAX

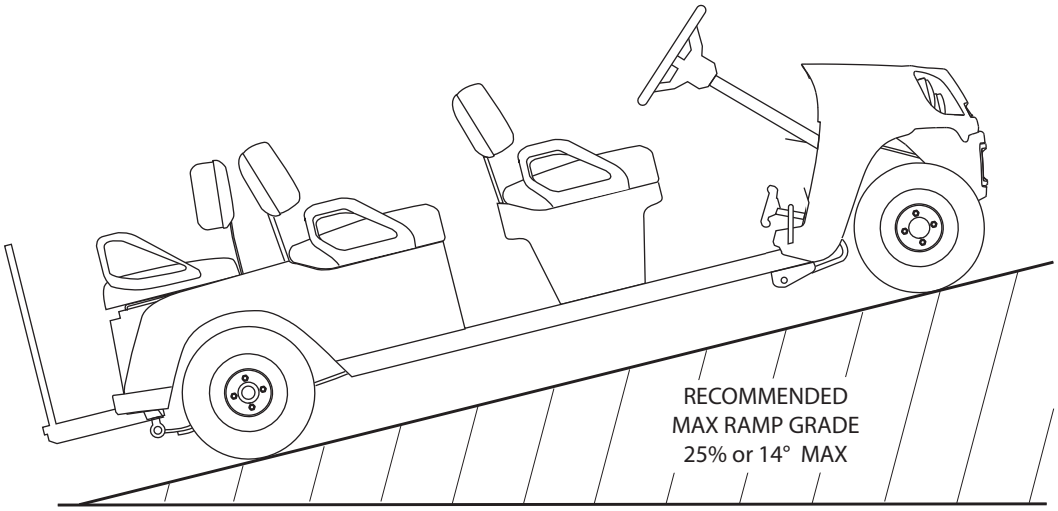

EXPRESS S6

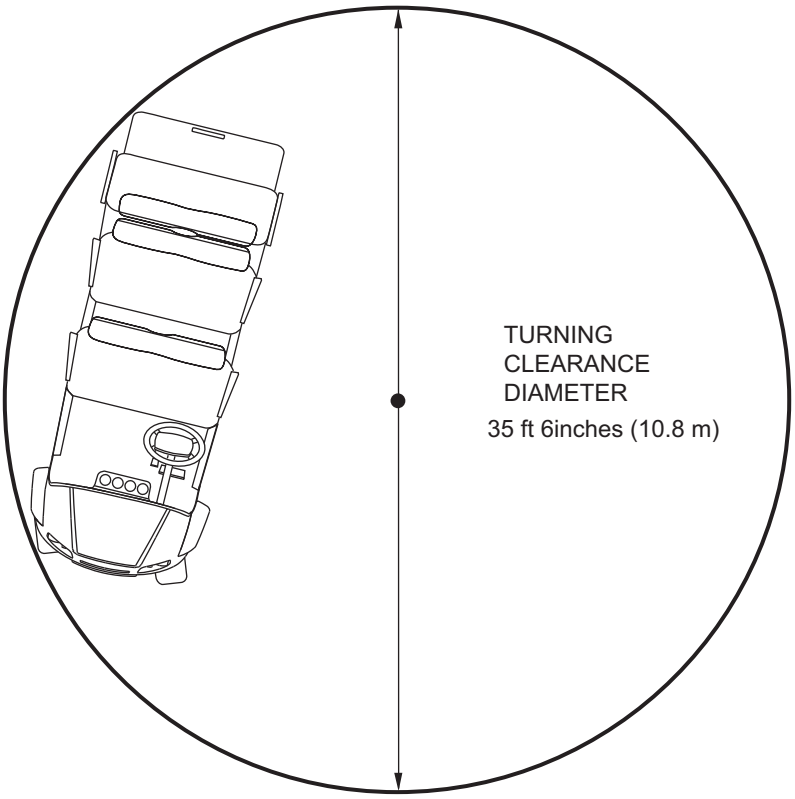

Read all of this manual to become thoroughly familiar with this vehicle. Pay particular attention to all Notices, Cautions, Warnings, and Dangers.

A Textron Company

MODEL: EXPRESS L6
TYPE: ELECTRIC POWERED PERSONNEL CARRIER
MODEL YEAR: 2012
Part No: 618867

PRODUCT SPECIFICATION

CONFIGURATION HIGHLIGHTS

Precision Drive System™ (PDS): Factory programmable to application

- Solid State continuously variable seperately excited speed controller
- Dash mounted direction selector switch (Forward-Neutral-Reverse)
- Anti-roll back, walkaway braking and alarm
- Anti-stall motor protection
- Regenerative 'Pedal Down' and/or 'Pedal Up' braking
- Eight, 6 Volt Deep Cycle
- Full torque, reduced speed reverse
- Inductive throttle sensor
- Diagnostic indicator
- Factory selectable performance options

Battery Charger: Delta Q, 48 VDC. H120/230 VAC 50/60 Hz. Underwriters Laboratories (U.L.) Listed, (C.S.A. Certified)
Motor: 48 volt DC shunt wound, brazed armature, solid copper windings. Non-vented 15.2 hp (11.3 kW) at 1600 rpm (1hour)
Drive Train: Direct motor shaft connected to transaxle pinion shaft
Electrical System: 48 Volt DC, eight, 6 volt deep cycle storage batteries (107 minute, 225 amp-hour @ 20 hr. discharge rate)
Transaxle: Differential with helical gears
Brakes: Dual rear wheel mechanical self-adjusting drum brakes. Automatic single point park brake release with self-compensating system.
Capacity: Choice of 6 seats (Std) or 4 seats and optional Wood Stake Sides or Roto-molded Cargo box.
Cargo Bed: Roto-molded cross-linked polyethelene. Removable hinged multi-position tailgate requires no latch mechanism.

PRODUCT OVERVIEW

Dimensions

Overall Length	138.0 in (351.0 cm)
Overall Width	46.5 in (119.0 cm)
Overall Height (No Canopy)	52.5 in (133.5 cm) (Top of steering wheel)
Overall Height (With Canopy)	76.0 in (193.0 cm)
Wheel Base	95.0 in (241.0 cm)
Front Wheel Track	37.5 in (95.0 cm)
Rear Wheel Track	38.5 in (98.0 cm)
Gnd Clearance @ Differential	7.0 in (18.0 cm)

Vehicle Power

Power Source	48 Volts DC
Motor Type	Shunt Wound
Continuous Horsepower (kW)	2.5 hp (1.9 kW)
Intermittent Horsepower (kW)	18.1 hp (13.5 kW) @ 1900 rpm
Electrical System	48 Volt
Batteries (Qty, Type)	Eight, 6 Volt Deep Cycle
Key or Pedal Start	Pedal Start
Battery Charger	48 VDC Delta Q, 120/230 VAC, UL & CSA
Speed Controller	400 Amp Precision Drive System (PDS)
Drive Train	Motor Shaft Direct Drive
Transaxle	Differential with helical gears
Gear Selection	Dash Mounted Forward-Neutral-Reverse
Rear Axle Ratio	14.7:1

Performance

Seating (Rear Facing Seat)	6 Person
Seating (Bed/Stake sides)	4 Person
Dry Weight	720.0 lb (325.0 kg) (Without Batteries)
Curb Weight	1210.0 lb (545.0 kg)
Vehicle load capacity	1198.0 lb (540.0 kg)
Outside Clearance Circle	25.5 ft (7.8 m)
Intersecting Aisle Clrnce	6.5 ft (1.98 m)
Speed (Level Ground)	16.0 mph ± 0.5 mph (26.0 kph ± 0.8 kph)
Towing Capacity	N/A

Steering & Suspension

Steering	Self-compensating rack and pinion
Front Suspension	Leaf springs with hydraulic shock absorbers
Rear Suspension	Leaf springs with hydraulic shock absorbers
Service Brake	Rear wheel mechanical self-adjusting drum
Parking Brake	Self-compensating, single point engagement
Front Tires	Terra Trac 23 x 10.5 - 12 on Alloy Wheel
Rear Tires	Terra Trac 23 x 10.5 - 12 on Alloy Wheel

Body & Chassis

Frame	Welded steel with DuraShield™ powder coat
Front Body & Finish	Injection molded TPO
Rear Body & Finish	Injection molded TPO
Seat Pod	Fiberglass & Gelcoat
Standard Color	Black

Some items shown may be optional equipment

Specifications are subject to change without notice
* Field installed accessories may require installation charges

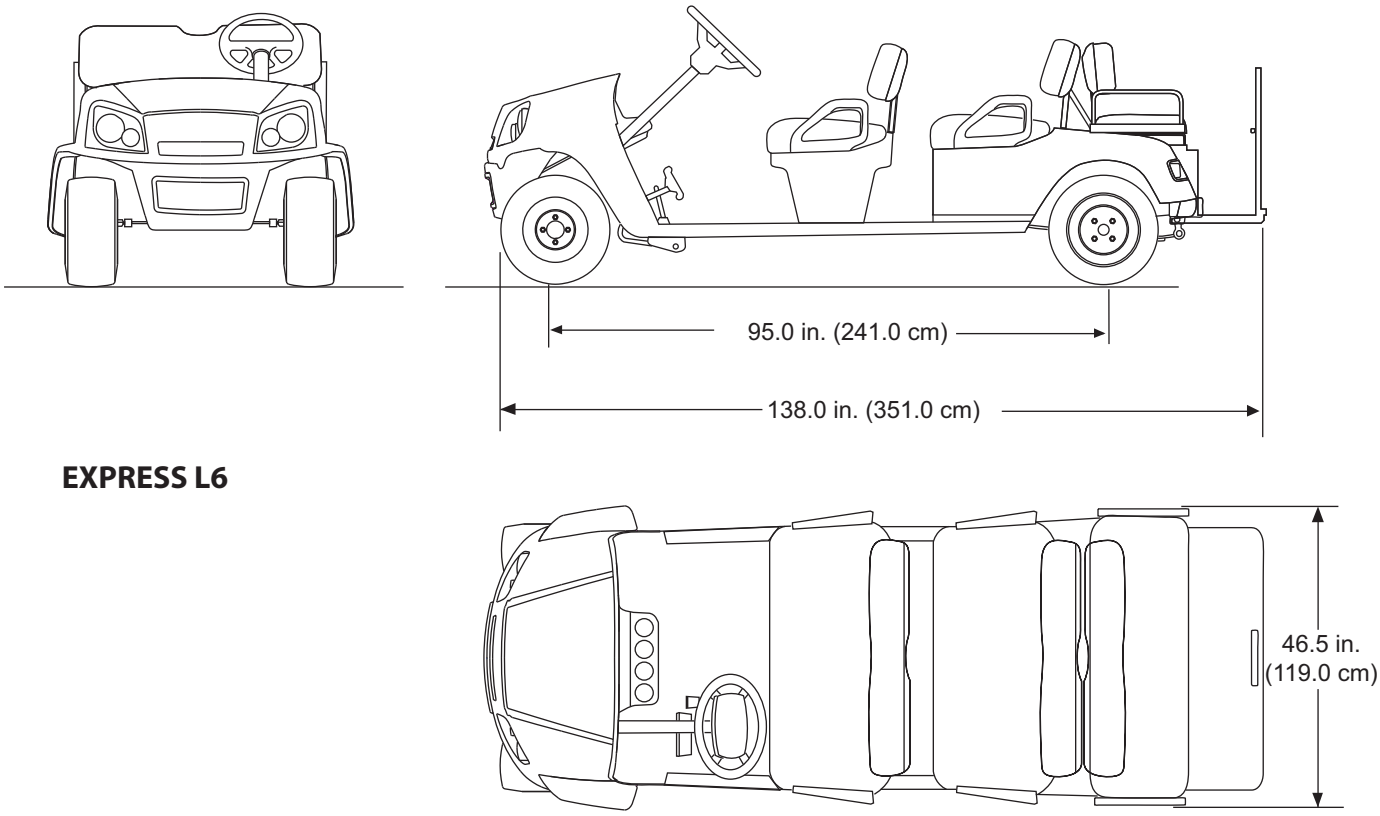

EXPRESS L6

EXPRESS L6

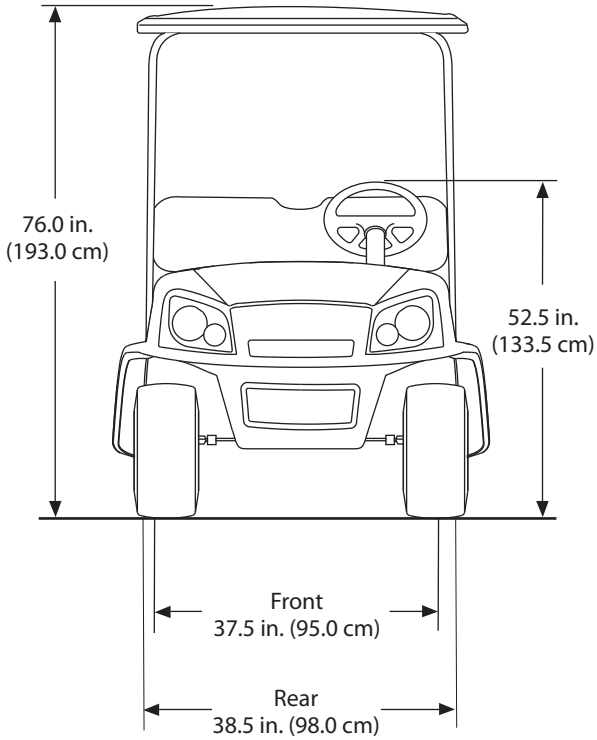

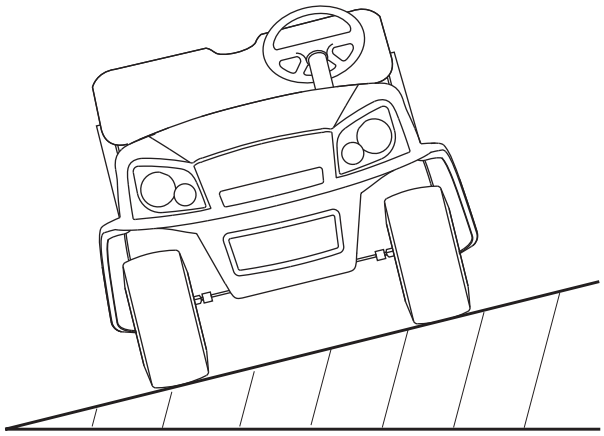

RECOMMENDED MAX SIDE TILT
25% or 14° MAX

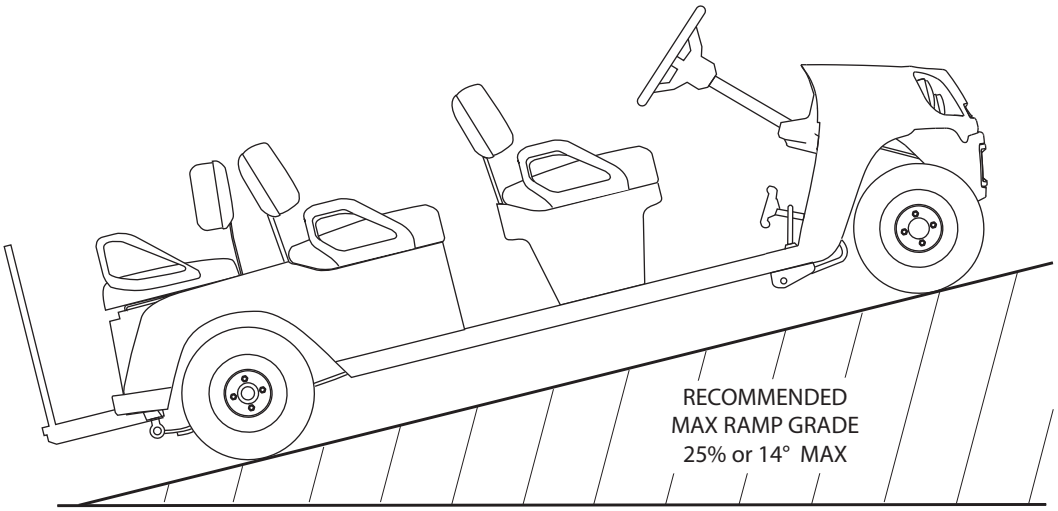

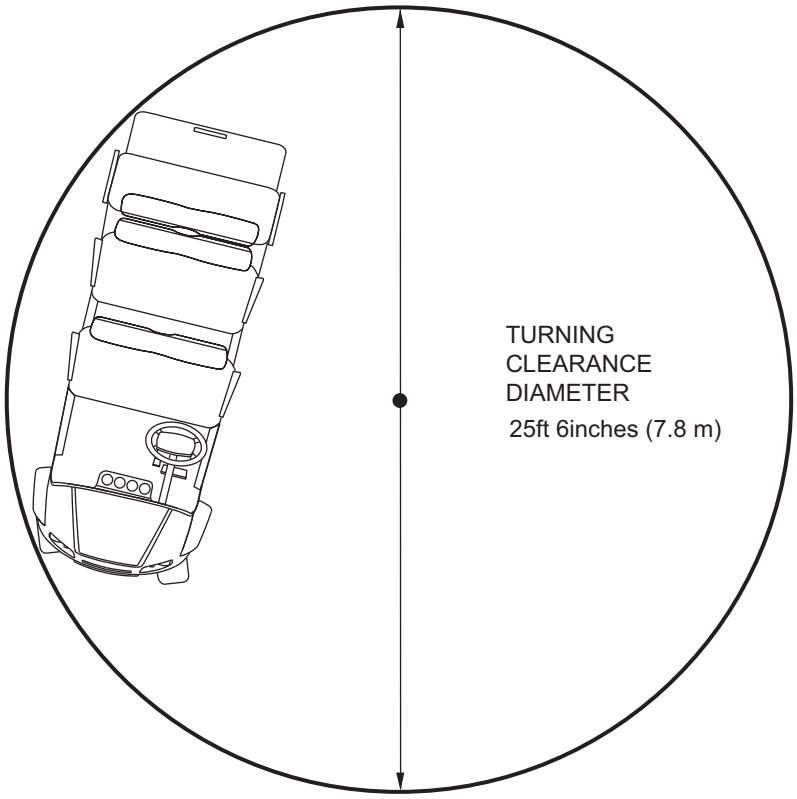
TURNING
CLEARANCE
DIAMETER
25ft 6inches (7.8 m)

EXPRESS L6

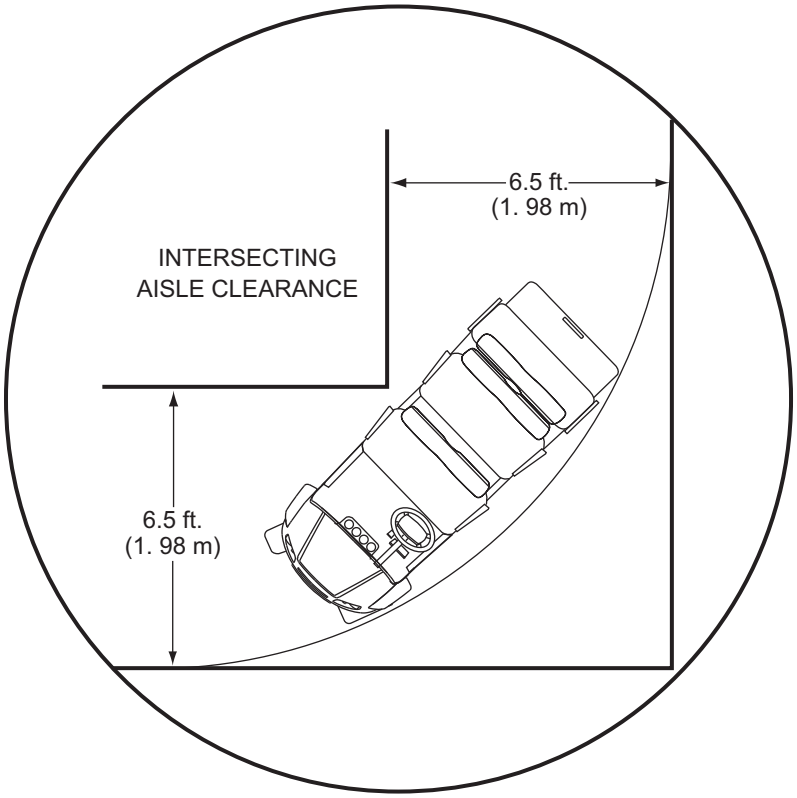
6.5 ft.
(1. 98 m)
INTERSECTING
AISLE CLEARANCE
6.5 ft.
(1. 98 m)

Read all of this manual to become thoroughly familiar with this vehicle. Pay particular attention to all Notices, Cautions, Warnings, and Dangers.

Notes:

Read all of this manual to become thoroughly familiar with this vehicle. Pay particular attention to all Notices, Cautions, Warnings, and Dangers.

Notes:

Read all of this manual to become thoroughly familiar with this vehicle. Pay particular attention to all Notices, Cautions, Warnings, and Dangers.

TITLE **PAGE NO.**

FEATURES.....3-3

General Information 3-3

Key Switch / Headlight Switch 3-3

State of Charge Meter 3-3

Direction Selector 3-3

Accelerator Pedal 3-3

Brake and Park Brake 3-4

Horn 3-5

Front Seat 3-5

Hip Restraint - Front 3-5

Hour Meter 3-5

Grab Handles 3-5

Weather Enclosure 3-5

Glove Box 3-5

Cup Holder 3-5

Steering Wheel 3-5

Charger with DC to DC Converter 3-5

Charger Receptacle 3-5

Battery Compartment 3-5

Run/Tow Switch 3-6

Ash Tray 3-7

Sun Top and Windshield 3-7

Convertible Seat 3-7

Handrail - Rear 3-7

Cargo Platform 3-8

Read all of this manual to become thoroughly familiar with this vehicle. Pay particular attention to all Notices, Cautions, Warnings, and Dangers.

Notes:

Read all of this manual to become thoroughly familiar with this vehicle. Pay particular attention to all Notices, Cautions, Warnings, and Dangers.

FEATURES

General Information

NOTICE

If the vehicle is equipped with factory installed custom accessories, some accessories remain operational with the key switch in the 'OFF' position.

CAUTION

ALL accessories that do NOT use the accessory wiring harness MUST be connected to draw from the entire 48 Volt battery pack. A DC to DC converter is required for accessories that require voltage other than 48 volts to operate properly.

Accessories connected to this vehicle that do not use the accessory harness must be connected to the DC to DC converter.

1. Key Switch / Headlight Switch

CAUTION

To reduce the possibility of component damage, the vehicle must be stopped before moving the key switch or the direction selector.

Located on the dash panel, the key switch enables the electrical system of the vehicle to be turned on and off by turning the key and the headlight is operated by turning the key switch beyond ON position. To prevent inadvertent operation of the vehicle when left unattended, the key should be turned to the 'OFF' position and removed.

2. State of Charge Meter

The vehicle is equipped with a state of charge meter located in the dash panel. The state of charge meter indicates the amount of usable power in the batteries. The state of charge meter shows the condition of the battery pack with F indicating a full charge on the battery pack and E indicating the battery pack needs to be charged.

3. Direction Selector

WARNING

To prevent loss of control, do not move vehicle direction selector while the vehicle is in motion. Moving the selector will result in sudden slowing of the vehicle and the beeping of a warning device.

Located on the dash panel, this switch permits the selection of either 'F' (forward), 'R' (reverse) or neutral (the position between forward and reverse). Vehicle should be left in neutral when unattended

4. Accelerator Pedal

WARNING

Unintentional movement of the accelerator pedal will release the park brake and may cause the vehicle to move which could result in severe injury or death.

With the key switch 'ON', depressing the accelerator pedal starts the motor.When the pedal is released, the motor will stop. To stop the vehicle more quickly, depress the service brake.If key switch is 'ON' and park brake is set, depressing the accelerator inadvertently will release the park brake and will cause the vehicle to move which could cause severe injury or death.

Depressing the accelerator pedal will release the park brake if it is engaged. This is a feature to assure the vehicle is not driven with the park brake engaged.Depressing the accelerator pedal is not the preferred method of releasing the park brake.

5. Brake and Park Brake

NOTICE

If the vehicle is equipped with factory installed custom accessories, some accessories remain operational with the key switch in the 'OFF' position.

The brake pedal incorporates a park brake feature. To engage the park brake, push down on the upper section of the pedal until it locks in place. The park brake will release when the service brake pedal is depressed. Use the lower section of the brake pedal to operate the service brake system.The front disc brakes activate as the brake pedal reaches the 'park' or latch position. Depressing the brake pedal further will increase the effectiveness of the front brakes.

6. Horn

The horn button is located on the driver's side floorboard; depressing the button will sound the vehicle's horn.

7. Front Seat

The front seat is designed for two occupants, one on each side of the seat.

8. Hip Restraint - Front

The front hip restraints are designed to help keep the occupants properly positioned in the event of sudden vehicle position changes.

9. Hour Meter

The hour meter indicates total hours of operation. If the vehicle is equipped with lights, the key switch has a position to operate them, indicated by the light icon.

10. Grab Handles

The vehicle is equipped with grab handles for easy access to vehicle.

11. Weather Enclosure

Weather enclosure as an option that the vehicle may be equipped with.

12. Glove Box

An optional lockable glove compartment is located on each side of the instrument panel.

13. Cup Holder

A cup holder is provided for convenience of both the driver and passenger.

14. Steering Wheel

The steering wheel located in front of the driver seat is used to steer the vehicle. The steering wheel is also installed with scorecard holder assembly.

15. Charger with DC to DC Converter

Charger is used to charge battery while vehicle is parked and the DC to DC converter is used to power accessories.

16. Charger Receptacle

The charging cord is to be connected to this receptacle while the vehicle is being charged.

17. Battery Compartment

The battery compartment can be accessed by raising the front seat to perform battery maintenance and access the Run/Tow switch.

18. Run/Tow Switch

The Run/Tow switch is used when the vehicle has become stalled or inoperative.

⚠ WARNING

To reduce the possibility of severe injury or death resulting from loss of vehicle control, consider the grade of the terrain the vehicle is on and set vehicle's park brake accordingly before switching the Run - Tow/Maintenance switch to the 'Tow/Maintenance' position. When in the 'Tow/Maintenance' position, the Anti-Roll Back and Walk-Away safety features of the system no longer function.

⚠ CAUTION

Before attempting to tow vehicle, move the Run-Tow/Maintenance switch to the 'Tow/Maintenance' position. Failure to do so will damage the controller or motor.

Before disconnecting or connecting a battery, or any other wiring, move the Run-Tow/Maintenance switch to the 'Tow/Maintenance' position.

After connecting a battery, or any other wiring, wait a minimum of 30 seconds before moving the Run-Tow/Maintenance switch to the 'Run' position.

NOTICE

The Run/Tow switch should always be returned to the 'TOW' position after moving a stalled vehicle. If the switch is left in the 'RUN' position for an extended period of time, it will drain the batteries.

The Run/Tow switch is located under the seat on the passenger side of the vehicle.

With the switch in 'TOW/MAINTENANCE' position:

- the controller is deactivated
- the electronic braking system is deactivated which allows the vehicle to be towed or roll freely
- the warning beeper is deactivated

With the switch in 'RUN' position:

- the controller is activated

the electronic braking system and warning beeper features are activated.

19. Ash Tray

The vehicle is equipped with ash tray as an option.

22. Sun Top and Windshield

WARNING

The sun top does not provide protection from roll over or falling objects. The windshield does not provide protection from tree limbs or flying objects.

The sun top and windshield provide some protection from the elements; however, they will not keep the operator and passenger dry in a downpour. This vehicle is not equipped with seat belts and the sun top has not been designed to provide roll over protection. In addition, the sun top does not protect against falling objects nor does the windshield protect against flying objects and tree limbs. Keep arms and legs inside of vehicle while it is moving.

23. Convertible Seat

WARNING

To prevent severe injury or death, rear seat passengers should hold on to both the hip restraints and the rear hand hold when the vehicle is in motion. Always be sure that all passengers are seated and holding on before operating vehicle.

Be sure that all passengers are seated and holding onto both the hip restraint and the rear hand hold (rear facing passengers) before operating vehicle.

24. Handrail - Rear

The rear handrails are designed to help keep the occupants properly positioned in the event of sudden vehicle position changes. Be sure that all passengers are seated and holding onto both the handrail and the rear hand hold (rear facing passengers) before operating the vehicle.

25. Cargo Platform

WARNING

Passengers should never be allowed to ride on the cargo platform. Severe injury or death could result if they should fall out or the vehicle is involved in an accident or sudden maneuver.

CAUTION

To prevent damage to rear seat, be sure to move any obstructing accessories mounted to rear handrail when folding-seat up or down.

The cargo platform is accessed by folding the rear seat down. Be careful when loading the vehicle. Tie down loads to prevent shifting. Do not overload vehicle. The cargo platform is limited to a maximum load of 550 lbs. (1200 kg). The load must be positioned on the platform as far forward as possible, its center of gravity must not be higher than 4" (10 cm) above the platform, and securely fastened down. Failure to follow these instructions could cause personal injury, damage to the vehicle and/or cause the vehicle to tip over. Be aware that increased loads may effect driving characteristics.

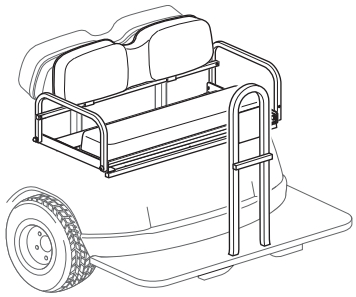

REAR SEAT FOLDED UP

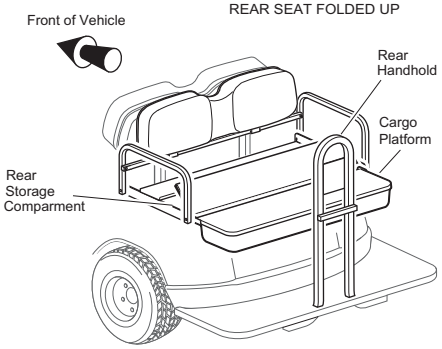

REAR SEAT FOLDED DOWN

Read all of this manual to become thoroughly familiar with this vehicle. Pay particular attention to all Notices, Cautions, Warnings, and Dangers.

Notes:

Read all of this manual to become thoroughly familiar with this vehicle. Pay particular attention to all Notices, Cautions, Warnings, and Dangers.

Notes:

OPERATING PROCEDURES

Read all of this manual to become thoroughly familiar with this vehicle. Pay particular attention to all Notices, Cautions, Warnings, and Dangers.

TITLE **PAGE NO.**

SERIAL NUMBER LOCATION 4-2

BEFORE INITIAL USE 4-2

PORATABLE CHARGER INSTALLATION 4-3

On-board Charger 4-4

OPERATING THE VEHICLE 4-5

PERFORMANCE 4-5

Speed Control 4-6

Pedal-Up Feature 4-6

Walk-Away Feature 4-6

Anti-Roll Back Feature 4-7

Anti-Stall Feature 4-7

High Pedal Disable Feature 4-7

Diagnostic Mode Feature 4-7

STARTING AND DRIVING 4-7

Starting Vehicle on a Hill 4-8

Coasting 4-8

Labels and Pictograms 4-8

Sun Top And Windshield 4-8

Read all of this manual to become thoroughly familiar with this vehicle. Pay particular attention to all Notices, Cautions, Warnings, and Dangers.

SERIAL NUMBER LOCATION

Two serial number and manufacture date code plates are on the vehicle. One (PART C) is placed on the body below the front, driver side of the seat, PART D is placed on the frame weld tube. The other (PART A and PART B) is located on the crossmember section of the chassis on the driver side (seat back support). To access it, raise the seat and lift up the flap on the access panel.

Design changes take place on an ongoing basis. In order to obtain correct components for the vehicle, the manufacture date code, serial number and vehicle model mustacture date code, serial number and vehicle model must be provided when ordering service parts.

BEFORE INITIAL USE

Read, understand and follow the safety label on the instrument panel. Be sure you understand how to operate the vehicle, its equipment as well as how to use it safely. Maintaining good performance depends to a large extent on the operator.

⚠ WARNING

Improper use of this vehicle could result in severe injury or death. The series of vehicles are light duty utility vehicles. They are NOT All Terrain Vehicles (ATV's).

This vehicle is not a toy and using it while engaging in horseplay is dangerous.

Plan carefully before using the vehicle to go significant distances over questionable terrain. Remember that a one hour drive may take many hours to walk out should you run out of battery power or be stranded by becoming stuck on unsuitable terrain.

Hydrogen gas is generated as a natural part of the lead acid battery charging process. A 4% concentration of hydrogen gas is explosive and could cause severe injury or death. Charging must take place in an area that is adequately ventilated (minimum of 5 air exchanges per hour).

To reduce the chance of battery explosion that could result in severe injury or death, never smoke around or charge batteries in an area that has open flame or electrical equipment that could cause an electrical arc.

Hydrogen gas is generated in the charging cycle of batteries and is explosive in concentrations as low as 4%. Because hydrogen gas is lighter than air, it will collect in the ceiling of buildings necessitating proper ventilation. Five air exchanges per hour is considered the minimum requirement.

Never charge a vehicle in an area that is subject to flame or spark. Pay particular attention to natural gas or propane gas water heaters and furnaces.

Before a new vehicle is put into operation, the items shown in the ***INITIAL SERVICE CHART*** must be performed.

The vehicle batteries must be fully charged before initial use.

Check for leaks that could have developed in shipment from the factory.

Check for correct tire inflation. See GENERAL SPECIFICATIONS.

Determine and record the braking distance required to stop the vehicle for future brake performance tests.

Remove the protective clear plastic from the seat bottom and back rest before placing the vehicle in service

ITEM	SERVICE OPERATION
Batteries	Charge batteries
Seats	Remove protective plastic covering
Brakes	Check operation
	Establish acceptable stopping distance
Tires	Check air pressure (see SPECIFICATIONS)
Portable Charger	Remove from vehicle and properly mount

Initial Service Chart

PORTABLE CHARGER INSTALLATION

WARNING

To reduce the possibility of overheating that may cause serious damage to the charger and create the potential for fire, do not block or obstruct the airways. Portable chargers must be mounted on a platform above the ground or in such a manner as to permit the maximum air flow underneath and around the charger.

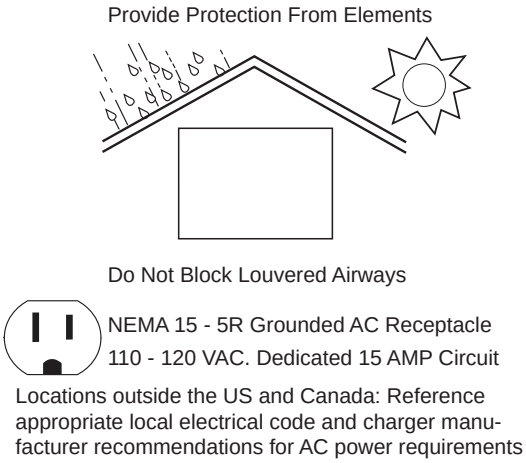

Proper Charger Installation

Portable chargers are shipped with the vehicle. Prior to vehicle or charger operation, chargers must be removed and mounted on a platform or wall above the ground to permit maximum air flow around and underneath the charger. If the charger is operated in an outdoor location, rain and sun protection must be provided. A dedicated circuit is required for the charger. Refer to the charger manual for appropriate circuit protection. The charger may remain plugged in to the AC outlet. To charge the vehicle, refer to the instruction labels on the charger. Insert the polarized DC plug completely into the vehicle receptacle

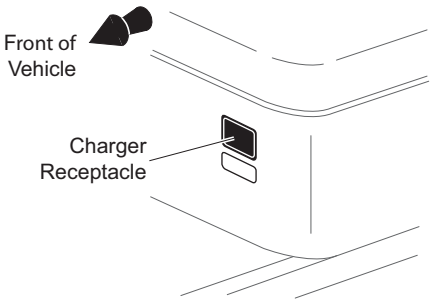

Charger Receptacle Location

The charger will automatically start a few seconds after plug insertion. The charger will automatically stop when batteries are fully charged and the DC plug can be removed to permit use of the vehicle.

NOTICE

Looping the DC cord through the steering wheel when charging serves as a good reminder to store the cord out of the way when finished with charging. The DC plug can be damaged by driving over or catching the cord on the vehicle when driving away.

WARNING

To reduce the possibility of a physical hazard that could result in an electrical shock or electrocution, be sure that the charger plug is not damaged and is inserted into a grounded receptacle.

The power (AC) cord is equipped with a grounded plug, do not attempt to pull out, cut or bend the ground post.

The charging (DC) cord is equipped with a polarized connector which fits into a matching receptacle on the vehicle.

On-board Charger

The on-board charger is located at the rear of the vehicle and is mounted between the frame rails. An optional retractable AC cord reel is also available. The charger is wired directly to the batteries, only requiring it be plugged into a dedicated 15 amp AC outlet to be operational. When charging cycle is complete, replace cord around charger handle in area provided or in the retractable cord reel (if equipped).

NOTICE

If vehicle is to be charged with a non E-Z-GO charger, refer to the instructions supplied with the charger.

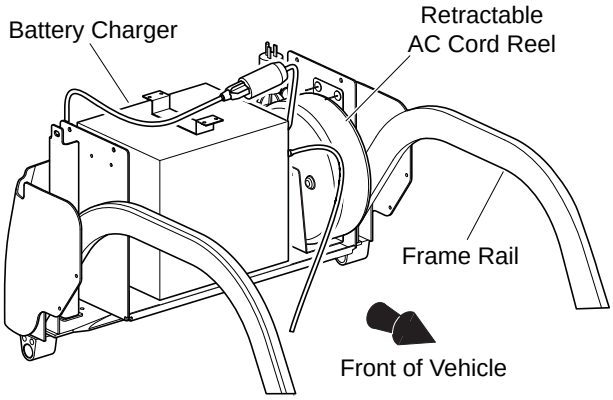

On-board charger

NOTICE

Looping the DC cord through the steering wheel when charging serves as a good reminder to store the cord out of the way when finished with charging. The DC plug can be damaged by driving over or catching the cord on the vehicle when driving away.

WARNING

An ungrounded electrical device may become a physical hazard that could result in an electrical shock or electrocution.

Read all of this manual to become thoroughly familiar with this vehicle. Pay particular attention to all Notices, Cautions, Warnings, and Dangers.

OPERATING THE VEHICLE

CAUTION

Improper use of the vehicle or the lack of proper maintenance may result in damage or decreased performance.

Read the following warnings before attempting to operate the vehicle.

WARNING

To reduce the possibility of severe injury or death resulting from loss of vehicle control, the following warnings must be observed:

When driving vehicle, consider the terrain, traffic conditions and the environmental factors which effect the terrain and the ability to control the vehicle.

Use extra care and reduced speed when driving on poor surfaces, such as loose dirt, wet grass, gravel, etc.

Stay in designated areas and avoid extremely rough terrain.

Maintain a safe speed when driving down hill. Use service brake to control speed when traveling down an incline. A sudden stop or change of direction may result in loss of control.

To prevent loss of control, do not move the direction selector of a vehicle while the vehicle is in motion. Moving the selector will result in a sudden slowing of the vehicle and the beeping of a warning device.

Slow down before and during turns. All turns should be made at reduced speed.

Never drive vehicle up, down, or across an incline that exceeds 14° (25% grade).

WARNING

Refer to GENERAL SPECIFICATIONS for seating capacity.

Depressing accelerator pedal will release foot operated park brake and may cause inadvertent vehicle movement. Turn the key to the 'OFF' position whenever the vehicle is parked.

To prevent inadvertent movement when the vehicle is to be left unattended, engage the park brake, move direction selector to forward position, turn key to 'OFF' position and remove key.

Make sure that the direction selector is in correct position before attempting to start the vehicle.

Always bring the vehicle to a complete stop before shifting the direction selector.

Do not take vehicle out of 'gear' while in motion (coast).

Check the area behind the vehicle before operating in reverse.

All occupants must be seated. Keep entire body inside vehicle and hold on while vehicle is in motion.

PERFORMANCE

NOTICE

PDS vehicles operate only when the Run - Tow/Maintenance/Storage switch is in the 'RUN' position.

The options are defined as follows:

Performance	Top Speed	Pedal-Up Speed Control
No Plug	18 mph (29 kph)	Mild

Performance Characteristics

The vehicle's top speed is sensed and regulated directly by the controller and the feature to slow the vehicle when the accelerator pedal is up is mild.

Speed Control

WARNING

To prevent the possibility of loss of control that could cause severe injury or death, use service brake to control speed. The PDS system is not a substitute for the service brake.

PDS models are equipped with a motor control system. Example: If all of the following events occur...

a) the vehicle is being driven down a slope.
b) the vehicle speed exceeds the designed speed with the accelerator pedal depressed **or** released.

The motor control system will limit the speed of the vehicle to the specified top speed (the warning beeper will **not** sound). When the system is activated by this sequence of events, the motor generates power which is returned to the batteries.

If the operator attempts to override the electronic braking feature by moving the direction selector or key switch to another position, the warning beeper will sound and the vehicle will brake **rapidly** until it reaches the speed of approximately 2 mph (3 kph).

Pedal-Up Feature

The pedal-up feature slows the vehicle when the accelerator pedal is released while the vehicle is moving between 10 mph (16 kph) and the vehicle's top speed.

Example: If all of the following events occur...

a) the vehicle is being driven down a slope
b) the accelerator pedal is released for more than one second

The pedal-up feature will slow the vehicle (the warning beeper will **not** sound) until either the vehicle speed is reduced to 10 mph (16 kph), at which it freely coasts between 10 and 4 mph (9 kph), or the accelerator pedal is applied. When pedal-up feature is activated by this sequence of events, the motor generates power which is returned to the batteries.

Walk-Away Feature

Walk-Away limits vehicle movement without driver input, slowing the vehicle to 2 mph (3 kph) and sounding an audible alarm (reverse beeper).

Example: If all of the following events occur...

a) the vehicle has been stopped for more than 1.5 seconds
b) the accelerator pedal has been released for more than one second
c) the vehicle begins to roll above 2 mph (3 kph)

The walk-away feature will limit speed to approximately 2 mph (3 kph) and the warning beeper will sound. When the accelerator pedal is depressed, the walk-away feature and warning beeper will be overridden and normal vehicle operation resumes. Any unusual situation sensed by the PDS system will cause a similar response. The system functions in all key switch positions.

Anti-Roll Back Feature

Anti-Roll Back, like Walk-Away, limits backward motion of the vehicle down an incline to less than 2 mph (3 kph). See 'Walk-Away Feature' above.

Anti-Stall Feature

Anti-Stall protection prevents motor damage from stalling the vehicle against an object or on a hill.

Example: If all of the following events occur...

a) the system senses that the accelerator pedal is depressed (power applied to motor)
b) the motor is stalled long enough that any more time may cause motor damage

The PDS system will momentarily interrupt power to the motor. This brief interruption will permit the vehicle to roll backwards slightly before again stopping in the stalled condition. This process will repeat itself periodically until the vehicles is moved from the stalled condition.

Example: If all of the following events occur...

a) the system senses that the accelerator pedal is depressed (power applied to motor)
b) the brake is engaged so as to prevent vehicle motion

The PDS system will sense a stalled motor condition and remove power from the motor. When the brake pedal is released, the vehicle will roll backwards slightly before power is returned to the motor.

High Pedal Disable Feature

High pedal disable prevents undesired acceleration if the direction selector lever is changed, or the key is turned on while the accelerator is depressed.

Diagnostic Mode Feature

Diagnostic mode eases troubleshooting.

In the unlikely event of certain electrical system failures, the PDS controller will default to a mode that will permit the vehicle to operate, but at a very reduced speed.
This feature allows the vehicle to be driven back to its storage facility where the problem can be diagnosed.
The controller can be put in diagnostic mode by the technician and the controller will report the failure mode.

STARTING AND DRIVING

WARNING

To reduce the possibility of roll - back which could result in severe injury or vehicle damage, do not release the service brake until motor has started.

Remove charger plug from vehicle receptacle (AC plug if equipped with an on-board charger) and properly store cable prior to moving vehicle.

To operate the vehicle:

- Apply the service brake, place the key in the key switch and turn it to the 'ON'/'N' position.
- Move the direction selector to the direction desired.
- Release the park brake by depressing the service brake pedal until the park brake releases.
- Slowly depress the accelerator pedal to start the motor.
- When the accelerator pedal is released, the motor controls the deceleration. To stop the vehicle more quickly, depress the **service brake pedal**.

NOTICE

When the direction selector is in the reverse position, a warning signal will sound to indicate that the vehicle is ready to run in reverse.

Starting Vehicle On A Hill

WARNING

To reduce the possibility of roll-back which could result in severe injury or vehicle damage, do not release the service brake until motor has started

CAUTION

Do not hold vehicle on hill by using accelerator and motor. Leaving motor in a stalled condition for more than 3 - 4 seconds will cause permanent damage to motor.

To reduce the possibility of permanent damage to the drive system, it is important to prevent excessive roll-back when starting the vehicle on a hill.

Place left foot on service brake and release the park brake. Depress accelerator with right foot and release the service brake by lifting the left foot.

Coasting

WARNING

To reduce the possibility of severe injury or death from coasting at above recommended speeds, limit speed with service brake.

Uncontrolled coasting does not occur because the controller limits the top speed of the vehicle while moving down hill. However, this is not a substitute for the service brake which should be used to control the speed of the vehicle.

NOTICE

This model is equipped with a feature (pedal-up braking) that slows the vehicle's speed when the accelerator pedal is released until the vehicle stops.

Labels and Pictograms

Vehicles may be labeled with pictograms as a method of conveying information or warnings. The SAFETY Section of this manual explains the labels that are used on this vehicle.

Sun Top And Windshield

WARNING

The sun top does not provide protection from roll-over or falling objects.

The windshield does not provide protection from tree limbs or flying objects.

The sun top and windshield provide some protection from the elements; however, they will not keep the operator and passenger dry in a downpour. This vehicle is not equipped with seat belts and the sun top has not been designed to provide roll-over protection. In addition, the sun top does not protect against falling objects nor does the windshield protect against flying objects and tree limbs. Keep arms and legs inside of the vehicle while it is moving.

Notes:

Notes:

Read all of this manual to become thoroughly familiar with this vehicle. Pay particular attention to all Notices, Cautions, Warnings, and Dangers.

TITLE **PAGE NO.**

VEHICLE CLEANING AND CARE 5-3

Vehicle Cleaning 5-3

COMMON SENSE OPERATION 5-4

ENVIRONMENTAL CONCERNS 5-4

REPAIR 5-5

Lifting the Vehicle 5-5

WHEELS AND TIRES 5-6

Tire Repair 5-6

Wheel Installation 5-7

LIGHT BULB REPLACEMENT 5-7

FUSE REPLACEMENT 5-8

TRANSPORTING VEHICLE 5-8

Towing 5-8

Hauling 5-8

SERVICE AND MAINTENANCE 5-8

ROUTINE MAINTENANCE 5-9

Tire Inspection 5-9

Brakes 5-9

PERIODIC BRAKE TEST FOR MECHANICAL BRAKES 5-10

REAR AXLE 5-10

Checking the Lubricant Level 5-10

LUBRICATION 5-11

HARDWARE 5-11

SYSTEM 5-12

CAPACITIES AND REPLACEMANT PARTS 5-12

PERIODIC SERVICE SCHEDULE 5-13

BATTERY CHARGING AND MAINTENANCE 5-14

Safety 5-14

Battery 5-15

Battery Maintenance 5-15

At Each Charging Cycle 5-15

Monthly 5-15

Electrolyte Level and Water 5-15

Battery Cleaning 5-18

Battery Replacement 5-18
Battery Charging 5-19
AC Voltage 5-19
Troubleshooting 5-19
HYDROMETER 5-20
Using Hydrometer 5-21
PROLONGED STORAGE 5-22

VEHICLE CLEANING AND CARE

Vehicle Cleaning

WARNING

To reduce the possibility of severe injury or vehicle damage, read and understand all instructions supplied by manufacturer of pressure washer.

CAUTION

When pressure washing exterior of vehicle, do not use pressure in excess of 700 psi. To reduce the possibility of cosmetic damage, do not use any abrasive or reactive solvents to clean plastic parts.

It is important that proper techniques and cleaning materials be used. Using excessive water pressure may cause severe injury to operator or bystander, damage to seals, plastics, seat material, body finish or electrical system. Do not use pressure in excess of 700 psi to wash exterior of vehicle.

Clean windshield with lots of water and a clean cloth. Minor scratches may be removed using a commercial plastic polish or Plexus® plastic cleaner available from the service parts department.

Normal cleaning of vinyl seats and plastic or rubber trim requires the use of a mild soap solution applied with a sponge or soft brush and wipe with a damp cloth.

Removal of oil, tar, asphalt, shoe polish, etc. will require the use of a commercially available vinyl/rubber cleaner.

The painted surfaces of the vehicle provide attractive appearance and durable protection. Frequent washing with lukewarm or cold water and mild detergent is required to preserve the painted surfaces.

Occasional cleaning and waxing with non-abrasive products designed for ‘clear coat’ automotive finishes will enhance the appearance and durability of the painted surfaces.

Corrosive materials used as fertilizers or for dust control can collect on the underbody of the vehicle. These materials will cause corrosion of underbody parts unless flushed occasionally with plain water. Thoroughly clean any areas where mud or other debris can collect. Sediment packed in closed areas should be loosened to ease it’s removal, taking care not to chip or otherwise damage paint.

COMMON SENSE OPERATION

WARNING

To prevent severe injury or death, observe the following:

Never transport loaded firearms on or in vehicle

Check that firearms are unloaded with the safety engaged and are properly secured with muzzle pointing in a safe direction before operating vehicle.

Be aware of other firearms in proximity to operator and passengers.

This vehicle is not a toy. If not operated properly and responsibly, it can cause severe injury or death to the operator, passengers or bystanders. All operators should possess a valid driver's license. Children should not be permitted to operate the vehicle. Children may not have the skill, judgement or strength to operate this or similar vehicles.

Alcohol, drugs and many over the counter medications reduce the ability of the driver to operate the vehicle safely. Always review side effects of any medication with a doctor or pharmacist before operating vehicle.

Protective clothing and an approved motorcycle helmet are recommended for operator and passengers when operating vehicle in rough or densely wooded terrain.

When driving at full speed on a dirt road, loose surfaces or wet grass, vehicle stopping distance will increase. If the vehicle is fully loaded, it will take longer to stop than with no load. When operating vehicle in wet weather conditions, remember that the brakes may need to be **lightly** applied in order to provide enough friction to dry the brake unit. If wet, the brakes will lose much of their effect.

Slow down when in unfamiliar terrain. Slow down when cresting a hill in an area that you are unfamiliar with.

Some hills are too steep to climb. If you attempt to climb a hill that is too steep or if you are unable to achieve adequate traction, **do not attempt to turn around on the hill. Slowly back straight down the hill using the service brake to control speed.**

ENVIRONMENTAL CONCERNS

WARNING

As a responsible user, practice respect for all wildlife and their habitat. Respect private property and comply with all local laws and regulations governing the use of light duty utility vehicles. To prevent severe injury or death while driving, be aware of the following:

Environmental hazards such as steep slopes, overhanging limbs, etc.

Danger of fire when vehicle is operated over dry combustible organic material.

When driving, be aware of environmental hazards such as steep slopes, overhanging limbs, etc. Be aware of the danger of fire when the gasoline powered vehicle is operated over dry combustible organic material.

Read all of this manual to become thoroughly familiar with this vehicle. Pay particular attention to all Notices, Cautions, Warnings, and Dangers.

REPAIR

Some servicing operations may require the front wheels, the rear wheels, or the entire vehicle to be raised.

WARNING

To reduce the possibility of severe injury or death from a vehicle falling from a jack:

Be sure the vehicle is on a firm and level surface.

Never get under a vehicle while it is supported by a jack.

Use jack stands and test the stability of the vehicle on the stands.

Always place chocks in front and behind the wheels not being raised.

Use extreme care since the vehicle is extremely unstable during the lifting process.

CAUTION

When lifting the vehicle, position the jacks and jack stands at the areas indicated only.

Lifting The Vehicle

Tool List	Qty.
Floor jack	1
Wheel Chocks	4
Jack stands	4

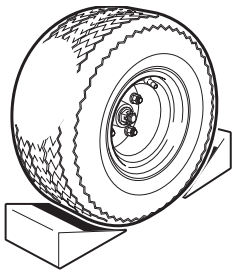

Remove payload from vehicle before lifting. No person(s) should be in or on the vehicle while lifting.

To raise the entire vehicle, install chocks in front and behind each front wheel. Center the jack under the rear frame crossmember. Raise the vehicle enough to place a jack stand under the outer ends of the rear axle.

Lower the jack and test the stability of the vehicle on the two jack stands.

Place the jack at the center of the front axle. Raise the vehicle enough to place jack stands under the frame crossmember as indicated.

Lower the jack and test the stability of the vehicle on all four jack stands.

If only the front or rear of the vehicle is to be raised, place the chocks in front and behind each wheel not being raised to stabilize the vehicle.

Lower the vehicle by reversing the lifting sequence.

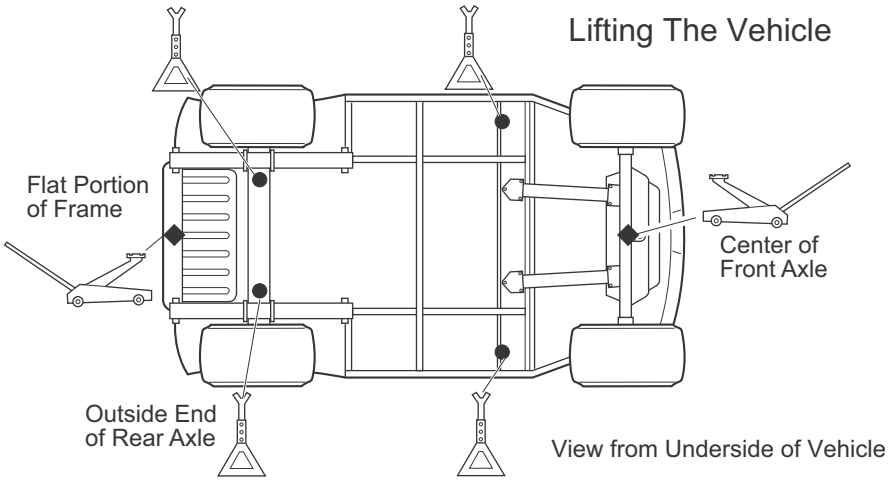

WHEELS AND TIRES

WARNING

A tire explosion can cause severe injury or death. Never exceed the inflation pressure rating on the tire sidewall.

To reduce the possibility of tire explosion, pressurize tire with small amounts of air applied intermittently to seat beads. Due to the low volume of the small tires, overinflation can occur in seconds. Never exceed the tire manufacturer's recommendation when seating a bead. Protect face and eyes from escaping air when removing a valve core.

To reduce the possibility of severe injury caused by a broken socket when removing wheels, use only sockets designed for impact wrench use.

DO NOT use low inflation tires on any E-Z-GO vehicle. DO NOT use any tire which has a recommended inflation pressure less than the inflation pressure recommended in the owner's guide.

Use caution when inflating tires. Overinflation could cause the tire to separate from the wheel or cause the tire to explode, either of which could cause severe injury.

Tire Repair

Tool List	Qty.	Tool List	Qty.
Lug wrench,11/16"	1	Impact socket, 11/16", 1/2" drive"	1
Impact wrench, 1/2" drive	1	Torque wrench, 1/2" drive	1

Use caution when inflating tires. Due to the low volume of the small tires, overinflation can occur in seconds. Overinflation could cause the tire to separate from the wheel or cause the tire to explode.

Tire inflation should be determined by the condition of the terrain. See GENERAL SPECIFICATIONS section for recommended tire inflation pressure. For outdoor applications with major use on grassy areas, the following should be considered. On hard turf, it is desirable to have a **slightly** higher inflation pressure. On very soft turf, a lower pressure reduces the possibility of tires cutting into the turf. For vehicles being used on paved or hard surfaces, tire inflation pressure should be in the higher allowable range, but under no condition should inflation pressure be higher than recommended on tire sidewall. **All four tires** should have the same pressure for optimum handling characteristics. Be sure to install the valve stem dust cap after checking or inflating.

The vehicle is fitted with low pressure tubeless tires mounted on one piece rims; therefore, the most cost effective way to repair a puncture in the tread is to use a commercial tire plug.

NOTICE

Tire plug tools and plugs are available at most automotive parts outlets and have the advantage of not requiring the tire be removed from the wheel.

If the tire is flat, remove the wheel and inflate the tire to the maximum recommended pressure for the tire. Immerse the tire in water to locate the leak and mark with chalk. Insert tire plug in accordance with manufacturer's instructions.

WARNING

To reduce the possibility of severe injury, be sure the mounting/demounting machine is anchored to floor. Wear OSHA approved safety equipment when mounting/demounting tires.

If the tire is to be removed or mounted, the tire changing machine manufacturer's recommendations must be followed in order to reduce possibility of severe injury.

Wheel Installation

CAUTION

To reduce the possibility of component damage, do not tighten lug nuts to more than 85 ft. lbs. (115 Nm) torque.

NOTICE

It is important to follow the 'cross sequence' pattern when installing lug nuts. This will assure even seating of the wheel against the hub.

With the valve stem to the outside, mount the wheel onto the hub with lug nuts. Finger tighten the lug nuts (1) in a 'cross sequence' pattern. Tighten the lug nuts to 50 to 85 ft. lbs. (68 to 115 Nm) torque in 20 ft. lbs. (27 Nm) increments following the 'cross sequence' pattern.

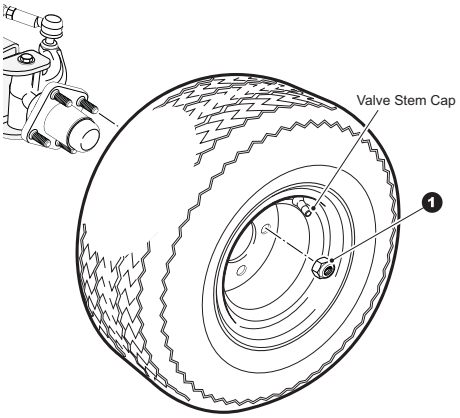

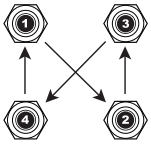

Cross Sequence

LIGHT BULB REPLACEMENT

CAUTION

To reduce the possibility of premature bulb failure, do not touch new bulbs with bare fingers. Use clean, dry tissue or paper towel to handle the glass portion of the bulb.

For vehicles equipped with lights mounted in the cowl, locate bulb socket on backside of light and turn bulb socket a quarter turn counterclockwise to unlock and pull out bulb and socket. Insert new bulb and rotate socket a quarter turn clockwise to secure.

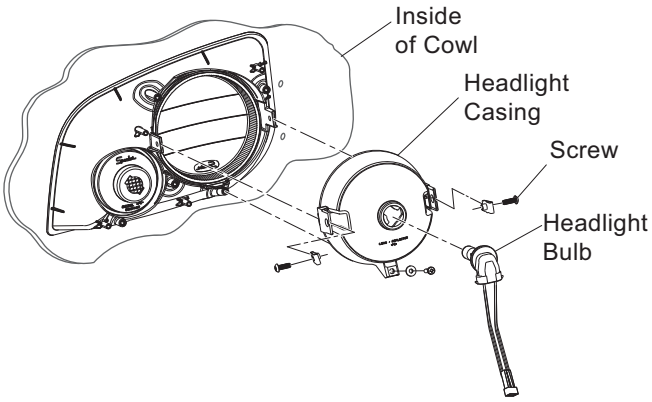

Similarly replace the turn signal light bulb, locate bulb socket on backside of light bar and turn bulb socket a quarter turn counterclockwise to unlock and pull out bulb and socket. Insert new bulb and rotate socket a quarter turn clockwise to secure.

To replace the tail and brake light bulb, remove hardware securing lens and remove lens. Install replacement bulb..

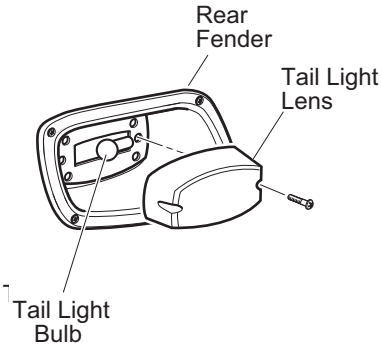

FUSE REPLACEMENT

To replace fuses, locate the fuse block under the driver side seat. Pull out old fuse and replace with a new automotive type fuse. Headlight and taillight bulbs and fuses are available from a local Distributor, an authorized Branch or the Service Parts Department.

TRANSPORTING VEHICLE

Towing

WARNING

This vehicle is not designed to be towed.

It is recommended that the vehicle be moved by placing the entire vehicle on a trailer, flatbed truck or other suitable transport.

Hauling

WARNING

To reduce the possibility of severe injury or death while transporting the vehicle:

Secure the vehicle and contents.

Never ride on the vehicle being transported.

Always remove the windshield before transporting.

Maximum speed with sun top installed is 50 mph (80 kph).

If the vehicle is to be transported at highway speeds, the sun top must be removed and the seat bottom secured. When transporting vehicle below highway speeds, check for tightness of hardware and cracks in sun top at mounting points. Always remove windshield when transporting. Always check that the vehicle and contents are adequately secured before transporting. The rated capacity of the trailer or truck must exceed the weight of the vehicle (see GENERAL SPECIFICATIONS for vehicle weight) and load plus 1200 lbs. (544 kg). Secure the vehicle using ratchet tie downs.

SERVICE AND MAINTENANCE

WARNING

To reduce the possibility of severe injury or death from improper servicing techniques:

DO NOT attempt any type of servicing operations before reading all notes, cautions and warnings in this manual.

Any servicing requiring adjustments to be made to the powertrain while the motor is running must be made with both drive wheels raised and vehicle properly supported on jack stands.

To reduce the possibility of motor damage, never operate vehicle at full throttle for more than 4 - 5 seconds while vehicle is in a 'no load' condition.

Reduce the possibility of accidental starting by disconnecting battery at negative terminal before servicing.

Read all of this manual to become thoroughly familiar with this vehicle. Pay particular attention to all Notices, Cautions, Warnings, and Dangers.

Wear eye protection when working on the vehicle. Use extra care when working around batteries, or using solvents or compressed air.

To reduce the possibility of causing an electrical arc, which could result in a battery explosion, turn off all electrical loads from the battery before removing battery wires.

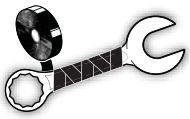

Wrap wrenches with vinyl tape to reduce the possibility of a dropped wrench 'shorting out' a battery, which could result in an explosion.

The electrolyte in a battery is an acid solution which can cause severe burns to the skin and eyes. Treat all electrolyte spills to the body and eyes with extended flushing with clear water. Contact a physician immediately.

Any electrolyte spills should be neutralized with a solution of 2 teaspoons (10 ml) sodium bicarbonate (baking soda) dissolved in 1 quart (1 liters) of water and flushed with water.

Aerosol containers of battery terminal protectant must be used with extreme care. Insulate metal container to reduce the possibility of can contacting battery terminals which could result in an explosion.

It is in the best interest of both vehicle owner and service technician to carefully follow the procedures recommended in this manual. Preventative maintenance, applied at recommended intervals, is the best guarantee for keeping the vehicle both dependable and economical.

This vehicle will give years of satisfactory service, providing it receives regular maintenance. Refer to the Periodic Service Schedule for appropriate service intervals.

ROUTINE MAINTENANCE

CAUTION

To prolong vehicle life, some maintenance items must be serviced more frequently on vehicles used under severe driving conditions such as extreme temperatures, extreme dust/debris conditions, or frequent use with maximum load.

To access the powertrain for routine maintenance, lift or remove the seat and remove the rear access panel. For major repair, refer to the appropriate Technician's Repair and Service Manual.

Some service procedures may require the vehicle to be lifted. Refer to LIFTING THE VEHICLE for proper lifting procedure and safety information.

Tire Inspection

Tire condition should be inspected per the Periodic Service Schedule. Inflation pressures should be checked when the tires are cool. Be sure to install the valve dust cap after checking or inflating.

Brakes

WARNING

To reduce the possibility of severe injury or death, always evaluate pedal travel before operating a vehicle to verify some braking function is present.

All driving brake tests must be done in a safe location with regard for the safety of all personnel.

Read all of this manual to become thoroughly familiar with this vehicle. Pay particular attention to all Notices, Cautions, Warnings, and Dangers.

NOTICE

Over time, a subtle loss of performance may take place; therefore, it is important to establish the standard with a new vehicle.

The Periodic Brake Performance Test should be performed regularly as an evaluation of braking system performance. It is useful as a method of identifying subtle loss of performance over time.

PERIODIC BRAKE TEST FOR MECHANICAL BRAKES

The purpose of this test is to compare the braking performance of the vehicle to the braking performance of new or 'known to be good' vehicles or to an established acceptable stopping distance. Actual stopping distances will be influenced by weather conditions, terrain, road surface condition, actual vehicle weight (accessories installed) and vehicle speed. No specific braking distance can be reliably specified. The test is conducted by latching the park brake to eliminate different pedal pressures and to include the affects of linkage mis-adjustment.

Establish the acceptable stopping distance by testing a new or 'known to be good' vehicle and recording the stopping location or stopping distance. Several vehicles should be tested when new and the range of stopping locations or distances recorded.

Drive the vehicle at maximum speed on a flat, dry, clean, paved surface. Quickly depress the brake pedal to latch the parking brake at the line or marker in the test area and remove foot from pedal. The vehicle should stop aggressively. The wheel brakes may or may not lock. Observe the vehicle stopping location or measure the vehicle stopping distance from the point at which the brakes were latched. The vehicle should stop within the 'normal' range of stopping distances. If the vehicle stops more than 4 ft. (1.2 m) beyond the acceptable stopping distance or pulls to one side, the vehicle has failed the test and should be tested again.

If the vehicle fails the second test, it should **immediately** be removed from service. The vehicle **must** be inspected by a qualified mechanic who should refer to the TROUBLE SHOOTING section in the Technician's Repair and Service Manual.

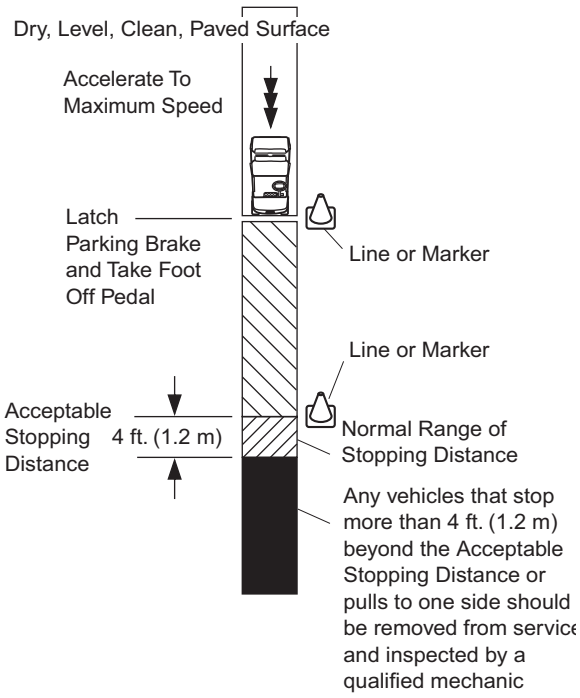

Typical Brake Performanace Test

REAR AXLE

The only maintenance required for the first five years is the periodic inspection of the rear axle for lubricant leakage. Unless leakage is evident, the lubricant need only be replaced after five years. Refer to the Service and Repair Manual for the fluid replacement procedure.

Checking The Lubricant Level

Clean the area around the check/fill plug and remove plug. The correct lubricant level is just below the bottom of the threaded hole. If lubricant is low, add lubricant as required. Add lubricant slowly until lubricant starts to seep from the hole. Install the check/fill plug. In the event that the lubricant is to be replaced, the oil pan must be removed or the oil siphoned through the check/fill hole.

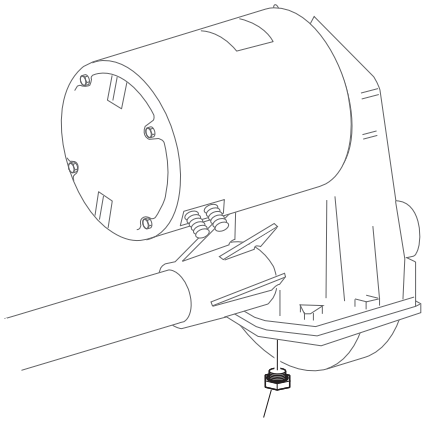

Read all of this manual to become thoroughly familiar with this vehicle. Pay particular attention to all Notices, Cautions, Warnings, and Dangers.

LUBRICATION

CAUTION

Do not use more than three (3) pumps of grease in any grease fitting at any one time. Excess grease may cause grease seals to fail or grease migration into areas that could damage components.

Lubrication Points

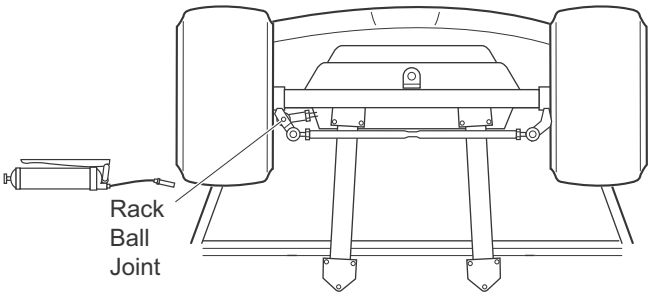

View from Underside of Vehicle

Putting more than three pumps of grease in a grease fitting could damage grease seals and cause premature bearing failure.

Hardware

ALL TORQUE FIGURES ARE IN FT. LBS. (Nm)
Unless otherwise noted in text, tighten all hardware in accordance with this chart.
This chart specifies 'lubricated' torque figures. Fasteners that are plated or lubricated when installed are considered 'wet' and require approximately 80% of the torque required for 'dry' fasteners.

BOLT SIZE	1/4"	5/16"	3/8"	7/16"	1/2"	9/16"	5/8"	3/4"	7/8"	1"
Grade 2	4 (5)	8 (11)	15 (20)	24 (33)	35 (47)	55 (75)	75 (102)	130 (176)	125 (169)	190 (258)
Grade 5	6 (8)	13 (18)	23 (31)	35 (47)	55 (75)	80 (108)	110 (149)	200 (271)	320 (434)	480 (651)
Grade 8	6 (8)	18 (24)	35 (47)	55 (75)	80 (108)	110 (149)	170 (230)	280 (380)	460 (624)	680 (922)
BOLT SIZE	M4	M5	M6	M8	M10	M12	M14			
Class 5.8 (Grade 2) 5.8	1 (2)	2 (3)	4 (6)	10 (14)	20 (27)	35 (47)	55 (76.4)			
Class 8.8 (Grade 5) 8.8	2 (3)	4 (6)	7 (10)	18 (24)	35 (47)	61 (83)	97 (131)			
Class 10.9 (Grade 8) 10.9	3 (4)	6 (8)	10 (14)	25 (34)	49 (66)	86 (117)	136 (184)			

Torque Specifications and Bolt Grades

Periodically, the vehicle should be inspected for loose fasteners. Fasteners should be tightened in accordance with the Torque Specifications table.

Use care when tightening fasteners and refer to the Technician's Repair and Service Manual for specific torque values.

Read all of this manual to become thoroughly familiar with this vehicle. Pay particular attention to all Notices, Cautions, Warnings, and Dangers.

Generally, three classes of standard hardware and two classes of metric hardware are used in the vehicle. Grade 5 hardware can be identified by the three marks on the hexagonal head and grade 8 hardware is identified by 6 marks on the head. Metric hardware is marked on the head with 8.8 or 10.9. Unmarked hardware is Grade 2.

SYSTEM TEST

At monthly intervals, test the controller by allowing the vehicle to roll down an incline with the accelerator pedal released. Braking force should be felt at approximately 2 mph (3 kph) indicating that the system is functioning. If vehicle speed continues to rise, apply the service brake and have vehicle inspected by a trained mechanic.

CAPACITIES AND REPLACEMENT PARTS

Rear Axle Oil	40 oz (1.2 liters) / SAE 30
Fuse	15 amp (P/N 18392-G1)
Headlight Bulb	(P/N 619100)
LED Bulb	(P/N 619101)
Turn Signal Bulb	(P/N 619102)
Tail Light Bulb	#1157 (P/N 21759-G1)

Capacities and Replacement Parts

Read all of this manual to become thoroughly familiar with this vehicle. Pay particular attention to all Notices, Cautions, Warnings, and Dangers.

PERIODIC SERVICE SCHEDULE

✓ Check ▶ Clean, Adjust, etc. ◆ Replace

To perform service that is listed in this schedule but not described in this manual, contact a local Service Representative or see the Repair and Service Manual for this vehicle.

NOTE: *Some maintenance items must be serviced more frequently on vehicles used under severe driving conditions*

DAILY	
	BEFORE USE: ✓ Check service brake general operation ✓ Check park brake function ✓ Check warning device function in reverse ✓ Check tire condition ✓ Check overall vehicle condition ▶ Recharge batteries to full state of charge after each day's use ✓ Inspect charger connector and receptacle at each charge

WEEKLY	
TIRES	✓ Examine for cuts, excessive wear and pressure (See GENERAL SPECIFICATIONS)
WHEELS	✓ Check for bent rims, missing or loose lug nuts

MONTHLY - 20 HOURS (includes items listed in previous table & the following)	
BATTERIES	▶ Clean batteries & terminals. See BATTERY CLEANING. ✓ Check charge condition and all connections
WIRING	✓ Check all wiring for loose connections and broken/missing insulation
CHARGER / RECEPTACLE	▶ Clean connections, keep receptacles free of dirt and foreign matter
ACCELERATOR	✓ Check for smooth movement
SERVICE BRAKE (MECHANICAL BRAKES)	✓ Conduct brake performance test
PARK BRAKE	✓ Check brake performance and adjust if required
DIRECTION SELECTOR	✓ Check attachment, tighten if required
STEERING ASSEMBLY	✓ Check for abnormal play, tightness of all hardware
TIE ROD/LINKAGES	✓ Check for excessive play, bent components or loose connections
CONTROLLER	✓ Check for Controller braking force for proper operation of system
REAR AXLE	✓ Check for leakage, add SAE 30 oil as required

QUARTERLY - 50 HOURS (includes items listed in previous tables & the following)	
FRONT AXLE	✓ Check for damage to axle and loose or missing hardware
FRONT SHOCK ABSORBERS	✓ Check for oil leakage and loose fasteners
FRONT SPRINGS	✓ Check for loose hardware, cracks at attachments
FRONT WHEEL ALIGNMENT	✓ Check for unusual tire wear, align if required
PARK BRAKE	✓ Check for bent/binding linkage rod ✓ Check for damage or wear to latch arm or catch bracket ▶ Lubricate as required, use light oil. DO NOT LUBRICATE CABLES OR BRAKE LATCH
REAR SHOCK ABSORBERS	✓ Check for oil leakage, loose mounting hardware
HARDWARE AND FASTENERS	✓ Check for loose or missing hardware and components ▶ Tighten or replace missing hardware

SEMI-ANNUAL - 125 HOURS (includes items listed in previous tables & the following)	
DIRECTION SELECTOR	✓ Check for wear and smooth movement (lubricate shaft with light oil if required)

Read all of this manual to become thoroughly familiar with this vehicle. Pay particular attention to all Notices, Cautions, Warnings, and Dangers.

KING PINS	✓ Check for excessive play and tightness of retaining nuts
STEERING ASSEMBLY	✓ Check bellows and pinion seal for damage or grease leakage
RACK END BALL JOINT	▶ Lubricate, use wheel bearing grease
REAR AXLE	✓ Check for unusual noise and loose or missing mounting hardware
ANNUAL - 250-300 HOURS (includes items listed in previous tables & the following)	
FRONT WHEEL BEARINGS	✓ Check and adjust as required, see Technician's Repair and Service Manual
REAR AXLE	✓ Check lubricant, add lubricant (SAE 30 oil) as required
SERVICE BRAKES	▶ Clean and adjust, see Technician's Repair and Service Manual ✓ Check brake shoe linings, see Technician's Repair and Service Manual

Periodic Service Schedule

BATTERY CHARGING AND MAINTENANCE

Safety

Always observe the following warnings when working on or near batteries.

⚠ WARNING

To prevent battery explosion that could result in severe personal injury or death, keep all smoking materials, open flames or sparks away from the batteries.

Hydrogen gas is formed when charging batteries. Do not charge batteries without adequate ventilation. A 4% concentration of hydrogen gas is explosive.

Be sure that the key switch is off and all electrical accessories are turned off before starting work on the vehicle.

Never disconnect a circuit under load at a battery terminal.

Batteries are heavy. Use proper lifting techniques when moving them. Always lift the battery with a commercially available battery lifting device. Use care not to tip batteries when removing or installing them; spilled electrolyte can cause burns and damage.

The electrolyte in a storage battery is an acid solution which can cause severe burns to the skin and eyes. Treat all electrolyte spills to the body and eyes with extended flushing with clear water. Contact a physician immediately.

Always wear a safety shield or approved safety goggles when adding water or charging batteries.

Any electrolyte spills should be neutralized with a solution of 1/4 cup (60 ml) sodium bicarbonate (baking soda) dissolved in 1 1/2 gallons (6 liters) of water and flushed with water.

Overfilling batteries may result in electrolyte being spilled from the battery during the charge cycle. Expelled electrolyte may cause damage to the vehicle and storage facility.

Aerosol containers of battery terminal protectant must be used with extreme care. Insulate metal container to prevent can from contacting battery terminals which could result in an explosion.

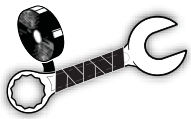

Wrap wrenches with vinyl tape to prevent the possibility of a dropped wrench from 'shorting out' a battery, which could result in an explosion and severe personal injury or death.

Battery

A battery is defined as two dissimilar metals immersed in an acid. If the acid is absent or if the metals are not dissimilar, a battery has not been created. The batteries most commonly used in these vehicles are lead acid.

A battery does not store electricity, but is able to produce electricity as the result of a chemical reaction which releases stored chemical energy in the form of electrical energy. The chemical reaction takes place faster in warm conditions and slower in cold conditions. Temperature is important when conducting tests on a battery and test results must be corrected to compensate for temperature differences.

As a battery ages, it still performs adequately except that its **capacity** is diminished. Capacity describes the time that a battery can continue to provide its design amperes from a full charge.

A battery has a maximum life, therefore good maintenance is designed to maximize the **available** life and reduce the factors that can reduce the life of the battery.

BATTERY MAINTENANCE

Tool List	Qty.
Insulated Wrench, 9/16"	1
Hydrometer	1
Battery Carrier	1
Battery Maintenance Kit P/N 25587-G01	1

At Each Charging Cycle

WARNING

To reduce the possibility of fire, never attach a battery charger to a vehicle that is to be unattended beyond the normal charging cycle. Overcharging could cause damage to the vehicle batteries and result in extreme overheating. The charger should be checked after 24 hours and unplugged after the charge cycle is complete.

Before charging the batteries, inspect the plug of the battery charger and vehicle receptacle housing for dirt or debris.

Charge the batteries after each day's use.

Monthly

- Inspect all wiring for fraying, loose terminations, corrosion or deterioration of insulation.
- Check that the electrolyte level is correct and add suitable water as required.
- Clean the batteries and wire terminations.
- Coat battery terminals with commercially available protectant.

Electrolyte Level and Water

The correct level of the electrolyte is 1/2" (13 mm) above the plates in each cell.

This level will leave approximately 1/4" - 3/8" (6 - 10 mm) of space between the electrolyte and the vent tube. The electrolyte level is important since any portion of the plates exposed to air will be ruined beyond repair. Also avoid filling with too much water, which will result in electrolyte being forced out of the battery due to gassing and a decrease in volume of the electrolyte that results from the charging cycle.

CAUTION

DO NOT overfill batteries. The charging cycle will expel electrolyte and result in component damage.

A battery being charged will 'gas' with the majority of the gassing taking place at the end of the charging cycle. This gas is hydrogen with is lighter than air. Water and sulphuric acid droplets will be carried out of the battery vents by the hydrogen gas, however, this loss is minimal. If the battery electrolyte level is too high, the electrolyte will block the vent tube and the gas will force it out of the vent tube and battery cap. The water will evaporate but the sulphuric acid will remain where it can damage vehicle components and the storage facility floor. Sulphuric acid loss will weaken the concentration of acid within the electrolyte and reduce the life of the battery.

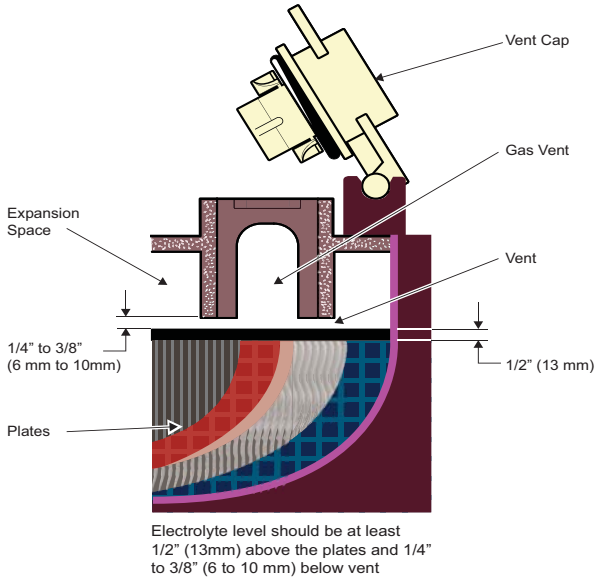

Correct Electrolyte Level

Over the life of the battery, a considerable amount of water is consumed. It is important that the water used be pure and free of contaminants that could reduce the life of the battery by reducing the chemical reaction. The water must be distilled or purified by an efficient filtration system. Water that is not distilled should be analyzed and, if required, filtration installed to permit the water to meet the requirements of the water purity table.

Impurity	Parts Per Million
Color	Clear
Suspended	Trace
Total Solids	100
Calcium & Magnesium Oxides	40
Iron	5
Ammonia	8
Organic & Volatile Matter	50
Nitrites	5
Nitrates	10
Chloride	5

Water Purity Table

Even if the water is colorless, odorless, tasteless and fit for drinking, the water should be analyzed to see that it does not exceed the impurity levels specified in the table.

Automatic watering devices such as the one included in the Battery Maintenance Kit (P/N 25587-G01) can be used with an approved water source. These watering devices are accurate, easy to use and allow for rapid filling. They also maintain the correct electrolyte level within the battery cells.

Read all of this manual to become thoroughly familiar with this vehicle. Pay particular attention to all Notices, Cautions, Warnings, and Dangers.

NOTICE

The watering device should only be used if the electrolyte level is less than 1/2” (13 mm) above top of plates.

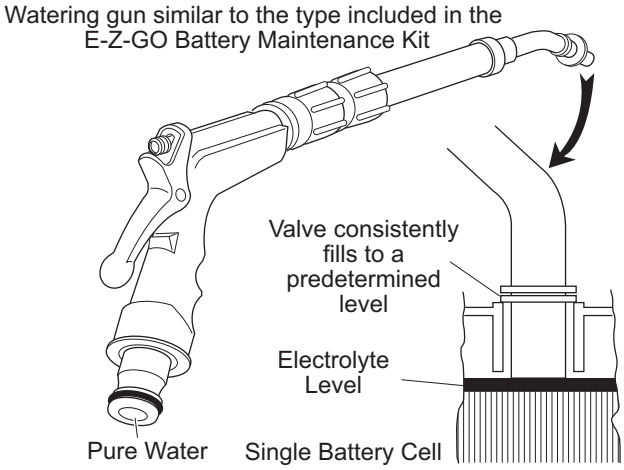

WARNING

The electrolyte in a storage battery is an acid solution which can cause severe burns to the skin and eyes. Treat all electrolyte spills to the body and eyes with extended flushing with clear water. Contact a physician immediately.

Any electrolyte spills should be neutralized with a solution of 1/4 cup (60 ml) sodium bicarbonate (baking soda) dissolved in 1 1/2 gallons (6 liters) of water and flushed with water.

Always wear a safety shield or approved safety goggles when adding water or charging batteries.

Battery Cleaning

CAUTION

To prevent battery damage, be sure that all battery caps are tightly installed.

To reduce the possibility of damage to vehicle or floor, neutralize acid before rinsing battery.

To reduce the possibility of damage to electrical components while cleaning, do not use a pressure washer.

Cleaning should take place per the Periodic Service Schedule.

When cleaning the outside of the batteries and terminals, do not use a water hose without first spraying the batteries with a solution of baking soda (sodium bicarbonate) and water to neutralize any acid deposits. Use of a water hose without first neutralizing the acid will move the acid from the top of the batteries to another area of the vehicle or storage facility, where it will attack the metal structure or the concrete/asphalt floor. After hosing down the batteries, a residue will be left on the batteries which is conductive and will contribute to the discharge of the batteries.

The correct cleaning technique is to spray the top and sides of the batteries with a solution of baking soda and water. This solution is best applied with a garden-type sprayer equipped with a non-metallic spray wand or plastic spray bottle. The solution should consist of baking soda mixed with clear water. In addition to the batteries special attention should be paid to metallic components adjacent to the batteries, these should also be sprayed with the baking soda solution.

Allow the solution to set for at least three minutes; use a soft bristle brush or cloth to wipe the tops of the batteries in order to remove any residue that could cause the self-discharge of the battery. Rinse the entire area with low pressure clear water. All of the items required for complete battery cleaning and watering are contained in the Battery Maintenance Kit (P/N 25587-G01).

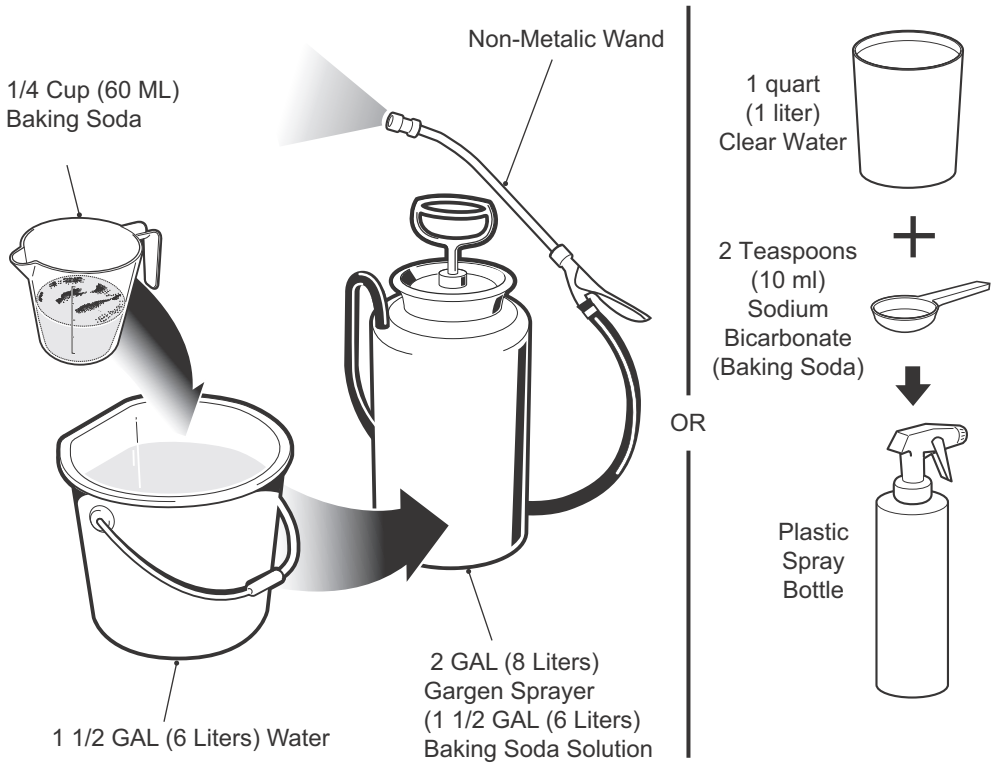

Preparing Acid Neutralizing Solution

Battery Replacement

CAUTION

Before any electrical service is performed, the Run-Tow/Maintenance switch must be placed in the 'Tow/Maintenance' position.

If a power wire (battery, motor or controller) is disconnected for any reason, the Run-Tow/Maintenance switch must be left in the 'Tow/Maintenance' position for at least 30 seconds after the circuit is restored.

Remove battery hold downs and cables. Lift out batteries with a commercially available lifting device.

If the batteries have been cleaned and any acid in the battery rack area neutralized as recommended, no corrosion to the battery racks or surrounding area should be present. Any corrosion found should be immediately removed with a putty knife and a wire brush. The area should be washed with a solution of sodium bicarbonate (baking soda) and water and thoroughly dried before priming and painting with a corrosion resistant paint.

The batteries should be placed into the battery racks and the battery hold downs tightened to 45 - 55 in. lbs. (5 - 6 Nm) torque, to prevent movement but not tight enough to cause distortion of the battery cases.

Inspect all wires and terminals. Clean any corrosion from the battery terminals or the wire terminals with a solution of sodium bicarbonate (baking soda) and brush clean if required.

WARNING

To prevent battery explosion that could result in severe personal injury or death, extreme care must be used with aerosol containers of battery terminal protectant. Insulate the metal container to prevent the metal can from contacting battery terminals which could result in an explosion.

Use care to connect the battery wires as shown.

Tighten the battery post hardware to 90 - 100 in. lbs. (6 -8 Nm) torque. Do not over-torque the terminal stud nut, this will cause a “mushroom” effect on the battery post which will prevent the terminal nut from being properly tightened. Protect the battery terminals and battery wire terminals with a commercially available coating.

Protect the battery terminals and battery wire terminals with a commercially available coating.

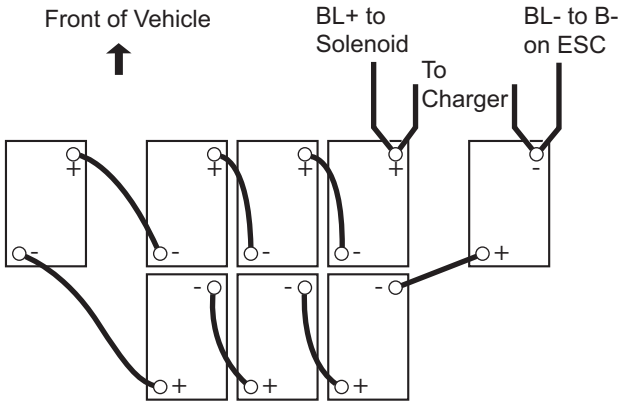

Battery Charging

The battery charger is designed to fully charge the battery set. If the batteries are severely deep cycled, some automatic battery chargers contain an electronic module that may not activate and the battery charger will not function. Automatic chargers will determine the correct duration of charge to the battery set and will shut off when the battery set is fully charged. Always refer to the instructions of the specific charger used.

Before charging, the following should be observed:

CAUTION

Do not overfill batteries. The charging cycle will expel electrolyte and result in component damage.

- The electrolyte level in all cells must be at the recommended level and cover the plates.
- The charging must take place in an area that is well ventilated and capable of removing the hydrogen gas that is generated by the charging process. A **minimum** of five air exchanges per hour is recommended.
- The charging connector components must be in good condition and free from dirt or debris.
- The charger connector must be fully inserted into the vehicle receptacle.
- The charger connector/cord set is protected from damage and is located in an area to prevent injury that may result from personnel running over or tripping over the cord set.
- The charger is automatically turned off during the connect/disconnect cycle and therefore no electrical arc is generated at the DC plug/receptacle contacts.

AC Voltage

Battery charger output is directly related to the input voltage. If multiple vehicles are receiving an incomplete charge in a normally adequate time period, low AC voltage could be the cause and the power company should be consulted.

Troubleshooting

In general, troubleshooting will be done for two distinct reasons. First, a battery that performs poorly and is outside of the manufacturers specification should be identified in order to replace it under the terms of the manufacturer’s warranty. Different manufacturers have different requirements. Consult the battery manufacturer or the manufacturer’s representative for specific requirements.

The second reason is to determine why a particular vehicle does not perform adequately. Performance problems may result in a vehicle that runs slowly or in a vehicle that is unable to operate for the time required.

A new battery must **mature** before it will develop its maximum capacity. Maturing may take up to 100 charge/discharge cycles. After the maturing phase, the older a battery gets, the lower the capacity. The only way to determine the capacity of a battery is to perform a load test using a discharge machine following manufacturer’s recommendations.

A cost effective way to identify a poorly performing battery is to use a hydrometer to identify a battery in a set with a lower than normal specific gravity. Once the particular cell or cells that are the problem are identified, the suspect

battery can be removed and replaced. At this point there is nothing that can be done to salvage the battery; however, the individual battery should be replaced with a good battery of the same brand, type and approximate age.

HYDROMETER

A hydrometer is used to test the state of charge of a battery cell. This is performed by measuring the density of the electrolyte, which is accomplished by measuring the specific gravity of the electrolyte. The greater the concentration of sulfuric acid, the more dense the electrolyte becomes. The higher the density, the higher the state of charge.

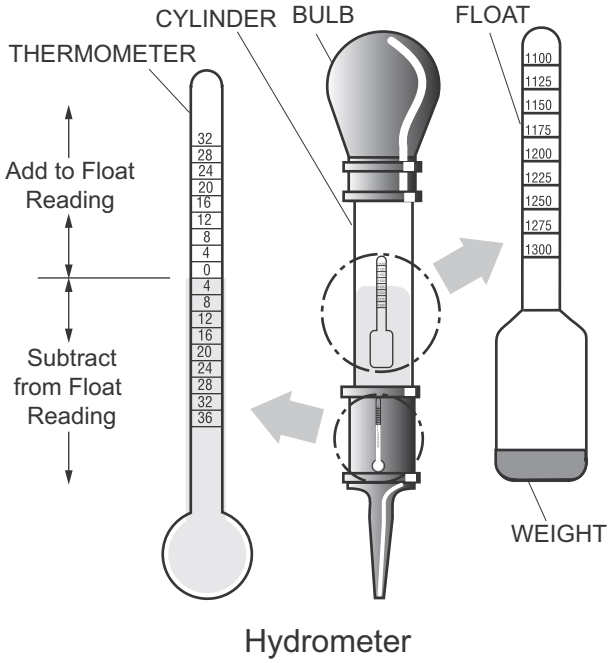

Hydrometer

WARNING

To prevent battery explosion that could result in severe personal injury or death, never insert a metal thermometer into a battery. Use a hydrometer with a built in thermometer that is designed for testing batteries.

Specific gravity is the measurement of a liquid that is compared to a baseline. The baseline is water which is assigned a base number of 1.000. The concentration of sulfuric acid to water in a new golf car battery is 1.280 which means that the electrolyte weighs 1.280 times the weight of the same volume of water. A fully charged battery will test at 1.275 - 1.280 while a discharged battery will read in the 1.140 range.

NOTICE

Do not perform a hydrometer test on a battery that has just been watered. The battery must go through at least one charge and discharge cycle in order to permit the water to adequately mix with the electrolyte.

The temperature of the **electrolyte** is important since the hydrometer reading must be corrected to 80° F (27° C). High quality hydrometers are equipped with an internal thermometer that will measure the temperature of the electrolyte and will include a conversion scale to correct the float reading. It is important to recognize that the electrolyte temperature is significantly different from the ambient temperature if the vehicle has been operated.

Read all of this manual to become thoroughly familiar with this vehicle. Pay particular attention to all Notices, Cautions, Warnings, and Dangers.

Using A Hydrometer

1. Draw electrolyte into the hydrometer several times to permit the thermometer to adjust to the electrolyte temperature and note the reading. Examine the color of the electrolyte. A brown or gray coloration indicates a problem with the battery and is a sign that the battery is nearing the end of its life.
2. Draw the minimum quantity of electrolyte into the hydrometer to permit the float to float freely without contacting the top or bottom of the cylinder.
3. Hold the hydrometer in a vertical position at eye level and note the reading where the electrolyte meets the scale on the float.
4. Add or subtract four points (.004) to the reading for every 10° F (6° C) the electrolyte temperature is above or below 80° F (27° C). Adjust the reading to conform with the electrolyte temperature, e.g., if the reading indicates a specific gravity of 1.250 and the electrolyte temperature is 90° F (32° C), **add** four points (.004) to the 1.250 which gives a corrected reading of 1.254. Similarly if the temperature was 70° F (21° C), **subtract** four points (.004) from the 1.250 to give a corrected reading of 1.246.
5. Test each cell and note the readings (corrected to 80° F or 27° C). A variation of fifty points between any two cell readings (example 1.250 - 1.200) indicates a problem with the low reading cell(s).

As a battery ages the specific gravity of the electrolyte will decrease at full charge. This is not a reason to replace the battery providing all cells are within fifty points of each other.

Since the hydrometer test is in response to a vehicle exhibiting a performance problem, the vehicle should be recharged and the test repeated. If the results indicate a weak cell, the battery or batteries should be removed and replaced with a good battery of the same brand, type and approximate age.

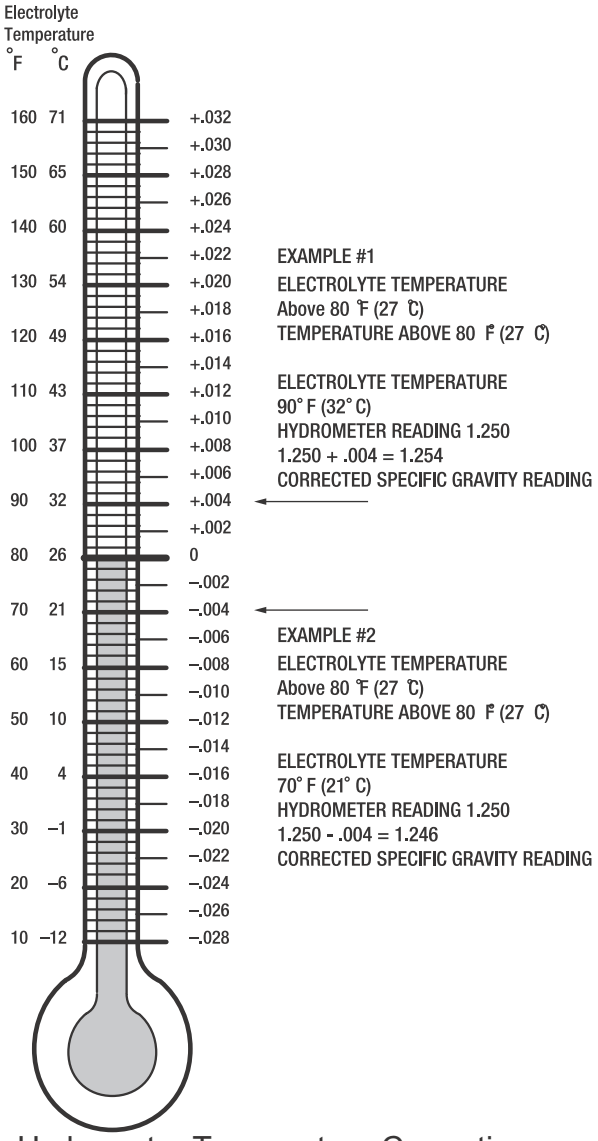

Hydrometer Temperature Correction

PROLONGED STORAGE

CAUTION

Battery charger, controller and other electronic devices need to be disconnected since they will contribute to the premature discharge of batteries.

During periods of storage, the batteries will need attention to keep them maintained and prevent discharge.

In high temperatures the chemical reaction is faster, while low temperatures cause the chemical reaction to slow down. A vehicle that is stored at 90° F (32° C) will loose.002 of specific gravity each day. If a fully charged battery has a specific gravity of 1.275, and the battery is allowed to sit unused, it will become partially discharged. When it reaches 1.240, which it will do in less than twenty days, it should be recharged. If a battery is left in a discharged state, sulfating takes place on and within the plates. This condition is not reversible and will cause permanent damage to the battery. In order to prevent damage, the battery should be recharged. A hydrometer (P/N 50900-G1) can be used to determine the specific gravity and therefore the state of charge of a battery.

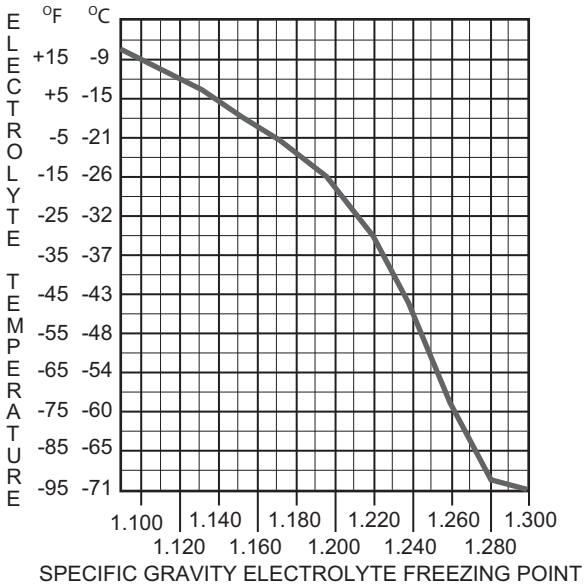

Freezing Point Of Electrolyte

In winter conditions, the battery must be fully charged to prevent the possibility of freezing. A fully charged battery will not freeze in temperatures above -75° F (-60° C). Although the chemical reaction is slowed in cold temperatures, the battery must be stored fully charged, and disconnected from any circuit that could discharge the battery. For portable chargers, disconnect the charging plug from the vehicle receptacle. For on-board chargers, disconnect the charging harness from the batteries. The batteries must be cleaned and all deposits neutralized and removed from the battery case to prevent self discharge. The batteries should be tested or recharged at thirty day minimum intervals.

Read all of this manual to become thoroughly familiar with this vehicle. Pay particular attention to all Notices, Cautions, Warnings, and Dangers.

Notes:

Read all of this manual to become thoroughly familiar with this vehicle. Pay particular attention to all Notices, Cautions, Warnings, and Dangers.

Notes:

A Textron Company

E-Z-GO Division of Textron Inc.,
1451 Marvin Griffin Road, Augusta, Georgia 30906 - 3852 USA

TO CONTACT US...
North America:

Technical Assistance & Warranty	Phone: 1-800-774-3946, FAX: 1-800-448-8124
Service Parts	Phone: 1-888-GET-E-Z-GO (1-888-438-3946), FAX: 1-800-752-6175
International:	Phone: 001-706-798-4311, FAX: 001-706-771-4609

Service Parts Manuals, as well as Repair and Service Manuals
are available from a local Distributor, an authorized Branch,
Genuine E-Z-GO Parts & Accessories Department or at www.shopezgo.com.

ISO 9001
ISO 14001
BUREAU VERITAS
Certification

Copyrighted Material
This manual may not be reproduced in whole or
in part without the express permission of
E-Z-GO Division of Textron Inc.
Technical Communications Department